580 1651

STANDARD CODE 2-7045

CARD CODE 580 1651

1651

SHEET 09 OF 09

SHEET 9 OF 9

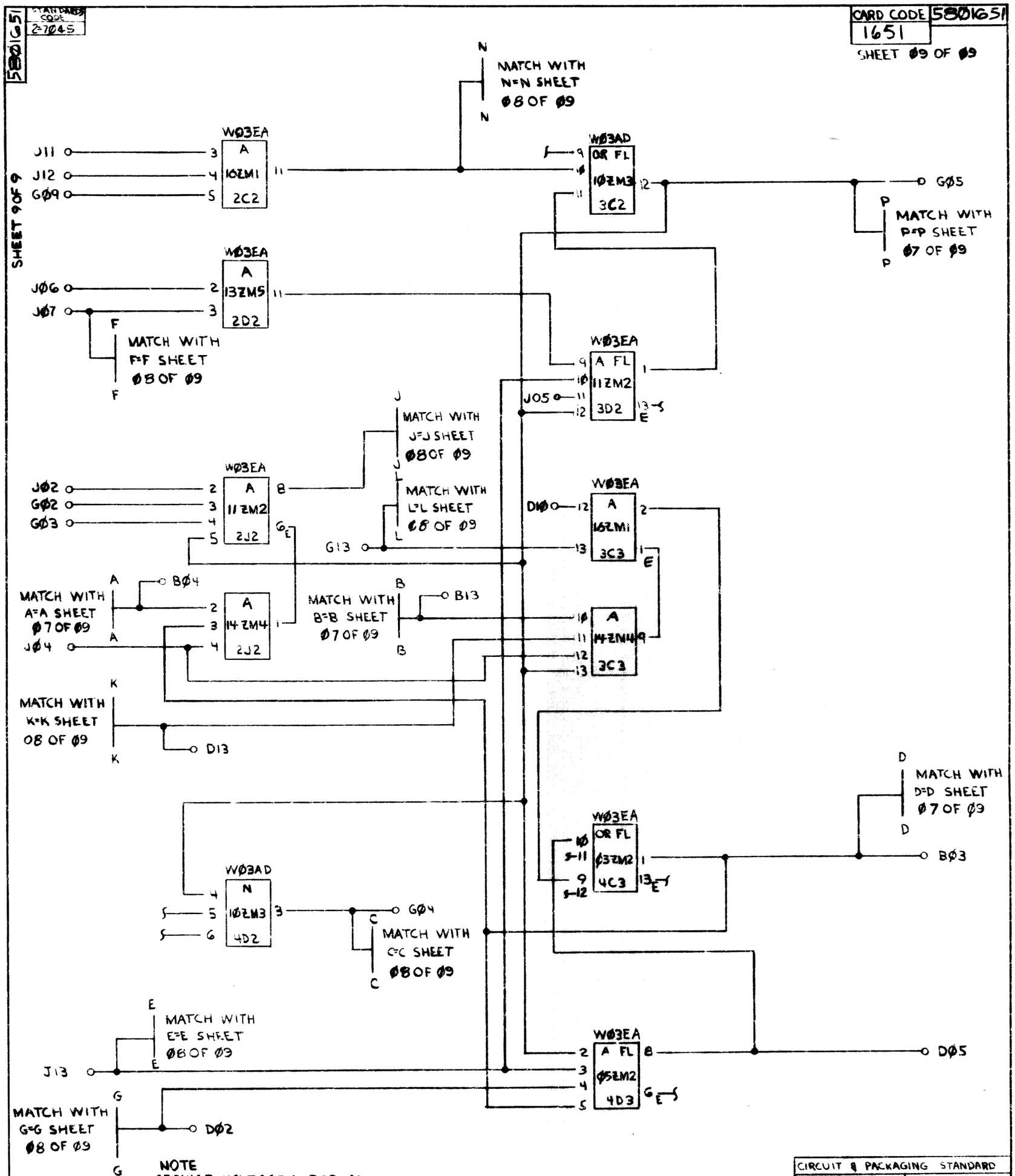

NOTE
SERVICE VOLTAGES FOR ALL MONOLITHIC MODULES ARE:
+6V - PIN 7
GND - PIN 14

CIRCUIT & PACKAGING STANDARD	
APPROVAL	DATE
JE Stenk	8-31-65

INTERNATIONAL BUSINESS MACHINES CORP.					DATE	CHANGE NO.	DATE	CHANGE NO.	NOTE	DEVELOPMENT NO.
NAME	CARD ASM TRANSMIT DATA CONTROL				9-13-65	165322-A			X PRINT TO ENG. SPEC. NO.	680-1102
DESIGN	NJS	5-12-65	MODEL	2701-SDA	24NOV65	165671 B				
DETAIL	NJS	5-12-65								
CHECK	DG	8-31-65	DRAW	NJS 5-12-65						580 1651
APPRO	JE	8-31-65	CHECK	NJ 8-31-65						

580 1651

FORM 90-6079-1

C.B. CO., NO. 66-0111A 4.2000