5801652

STANDARDS CODE 2-7045

RESTRICTED

CARD CODE 1652 | 5801652

SHEET 7 OF 9

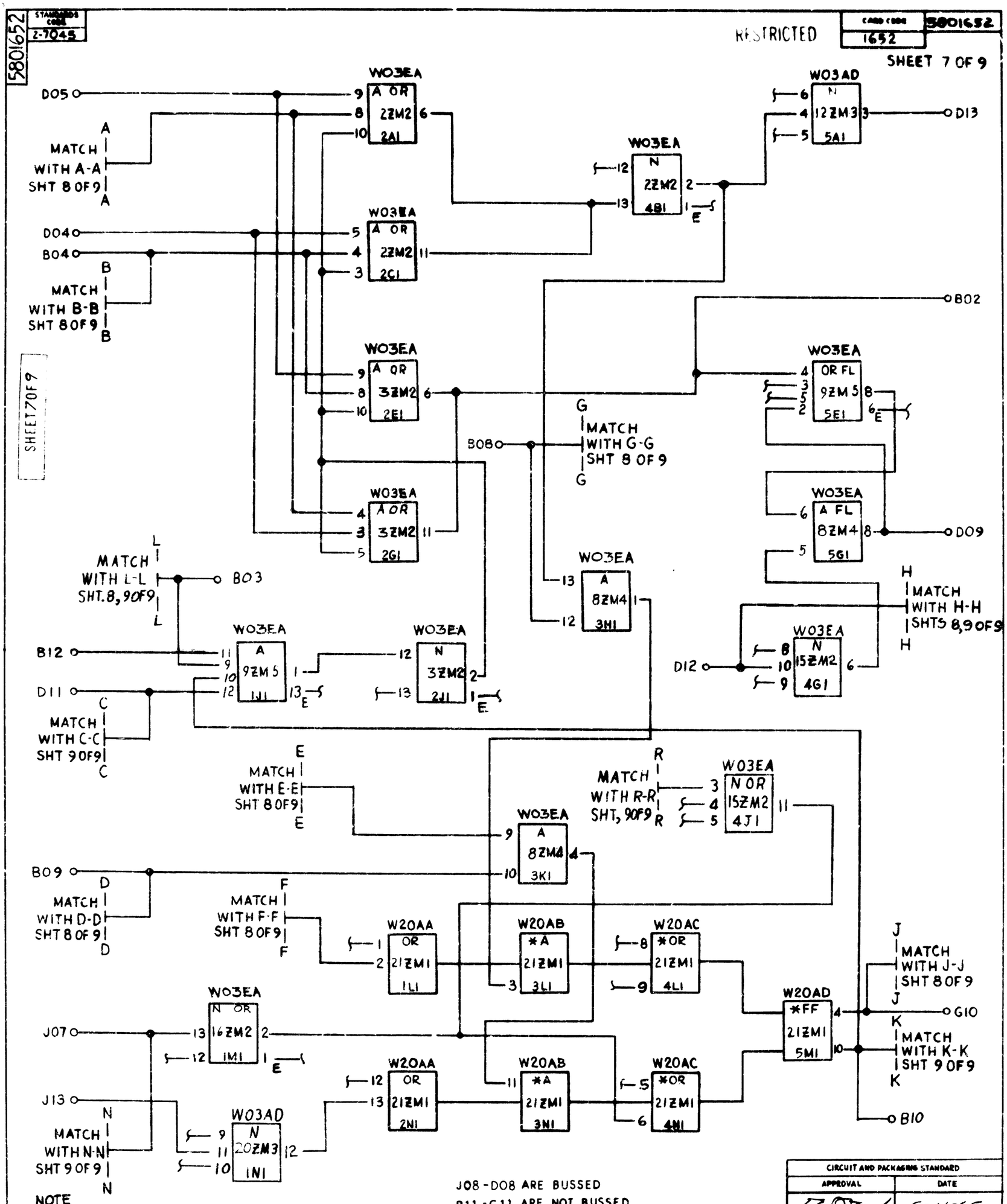

J08 - D08 ARE BUSSED

B11 - G11 ARE NOT BUSSED

NOTE

SERVICE VOLTAGES FOR MONOLITHIC MODULES ARE; +6V - PIN 7, GND - PIN 14.

CIRCUIT AND PACKAGING STANDARD	
APPROVAL	DATE
J.R. Brand	6-11-65

INTERNATIONAL BUSINESS MACHINES CORP.		DATE	CHANGE NO.		DATE	CHANGE NO.
NAME	CARD ASM-RECEIVE SOR CONVERTER	9-12-65	165357	A		
RDC RTL RCL SEND REPLY		16DEC65	166129	B		
DESIGN	J.G. 4-21-65 MODEL 2701-500	31JAN66	167114	C		
DETAIL	J.G. 4-21-65					
CHECK	D.G. 6-9-65 DRAW E.J.S. 5-5-65					
APPRO	J.E.S. 6-7-65 CHECK P.J. 8-27-65					

NOTE
X PRINT TO ENG. SPEC. NO.
895291

DEVELOPMENT NO. 680-1103

5801652

5801652