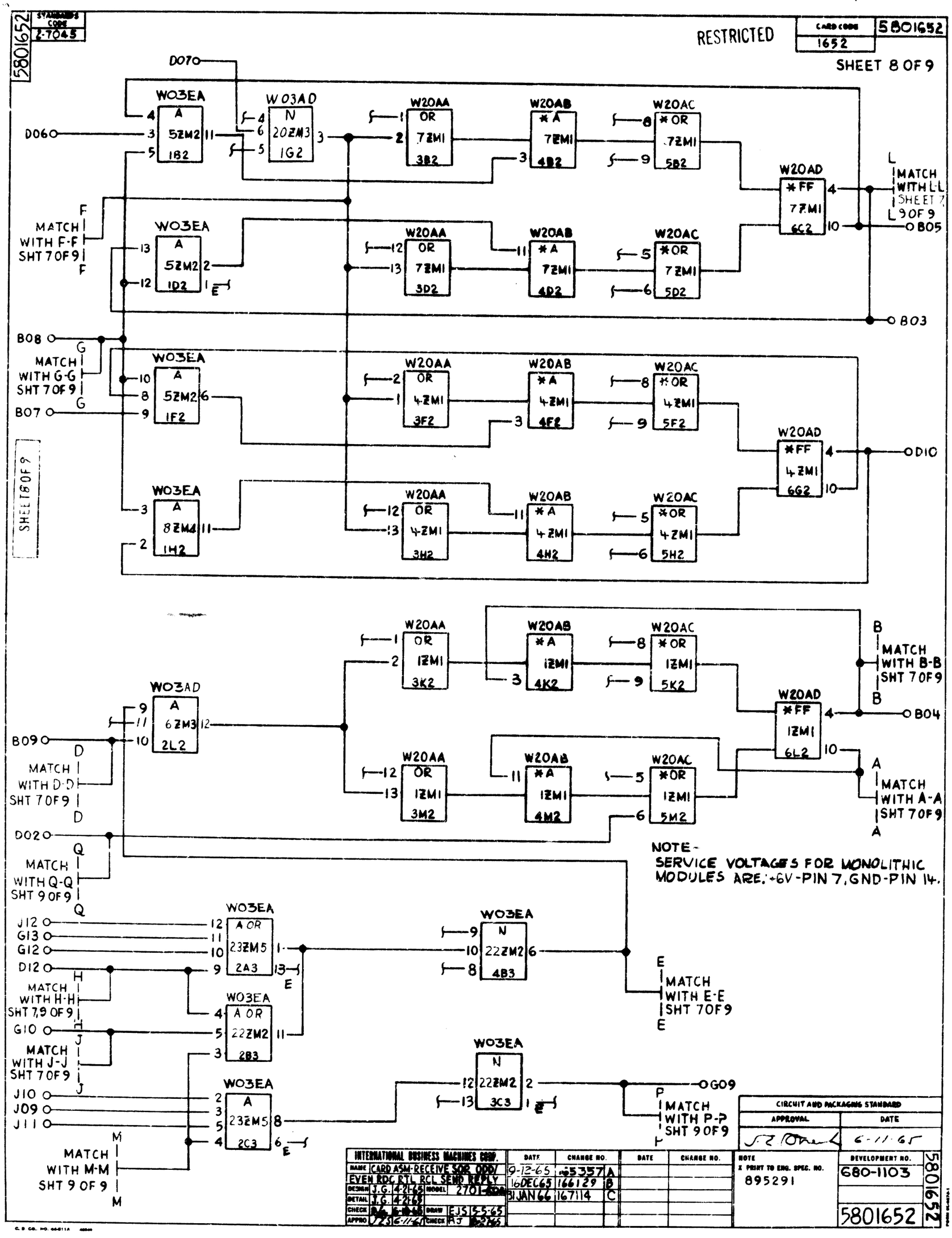
5801652
STANDARDS CODE 2-7045
RESTRICTED
CARD CODE 1652
5801652
SHEET 8 OF 9
D07
D06
W03EA A 5ZM2 1B2
W03AD N 20ZM3 1G2
W20AA OR 7ZMI 3B2
W20AB *A 7ZMI 4B2
W20AC *OR 7ZMI 5B2
W20AD *FF 7ZMI 6C2
MATCH WITH L-L SHEET 7 OF 9
B05
MATCH WITH F-F SHT 7 OF 9
W03EA A 5ZM2 1D2
W20AA OR 7ZMI 3D2
W20AB *A 7ZMI 4D2
W20AC *OR 7ZMI 5D2
B03
B08
MATCH WITH G-G SHT 7 OF 9
B07
W03EA A 5ZM2 1F2
W20AA OR 4ZMI 3F2
W20AB *A 4ZMI 4F2
W20AC *OR 4ZMI 5F2
W20AD *FF 4ZMI 6G2
D10
SHEET 8 OF 9
W03EA A 8ZM4 1H2
W20AA OR 4ZMI 3H2
W20AB *A 4ZMI 4H2
W20AC *OR 4ZMI 5H2
W20AA OR 1ZMI 3K2
W20AB *A 1ZMI 4K2
W20AC *OR 1ZMI 5K2
W20AD *FF 1ZMI 6L2
MATCH WITH B-B SHT 7 OF 9
B04
W03AD A 6ZM3 2L2
B09
MATCH WITH D-D SHT 7 OF 9
W20AA OR 1ZMI 3M2
W20AB *A 1ZMI 4M2
W20AC *OR 1ZMI 5M2
MATCH WITH A-A SHT 7 OF 9
D02
MATCH WITH Q-Q SHT 9 OF 9
NOTE-
SERVICE VOLTAGES FOR MONOLITHIC MODULES ARE: +6V-PIN 7, GND-PIN 14.
J12
G13
G12
D12
W03EA A OR 23ZM5 2A3
W03EA N 22ZM2 4B3
MATCH WITH E-E SHT 7 OF 9
MATCH WITH H-H SHT 7,9 OF 9
G10
W03EA A OR 22ZM2 2B3
MATCH WITH J-J SHT 7 OF 9
W03EA N 22ZM2 3C3
G09
J10
J09
J11
W03EA A 23ZM5 2C3
MATCH WITH P-P SHT 9 OF 9
MATCH WITH M-M SHT 9 OF 9
CIRCUIT AND PACKAGING STANDARD
APPROVAL
DATE
6-11-65
INTERNATIONAL BUSINESS MACHINES CORP.
NAME CARD ASM-RECEIVE SOR ODD/EVEN RDC RTL RCL SEND REPLY
DESIGN J.G. 4-21-65
DETAIL J.G. 4-21-65
CHECK
APPRO
MODEL 2701
DRAW EJS 5-5-65
CHECK AJ
DATE
CHANGE NO.
9-12-65 5357 A
16DEC65 166129 B
31JAN66 167114 C
NOTE
X PRINT TO ENG. SPEC. NO.
895291
DEVELOPMENT NO.
680-1103
5801652