5801652

STANDARDS CODE 2-7045

CARD CODE 1652 5801652

SHEET 9 OF 9

RESTRICTED

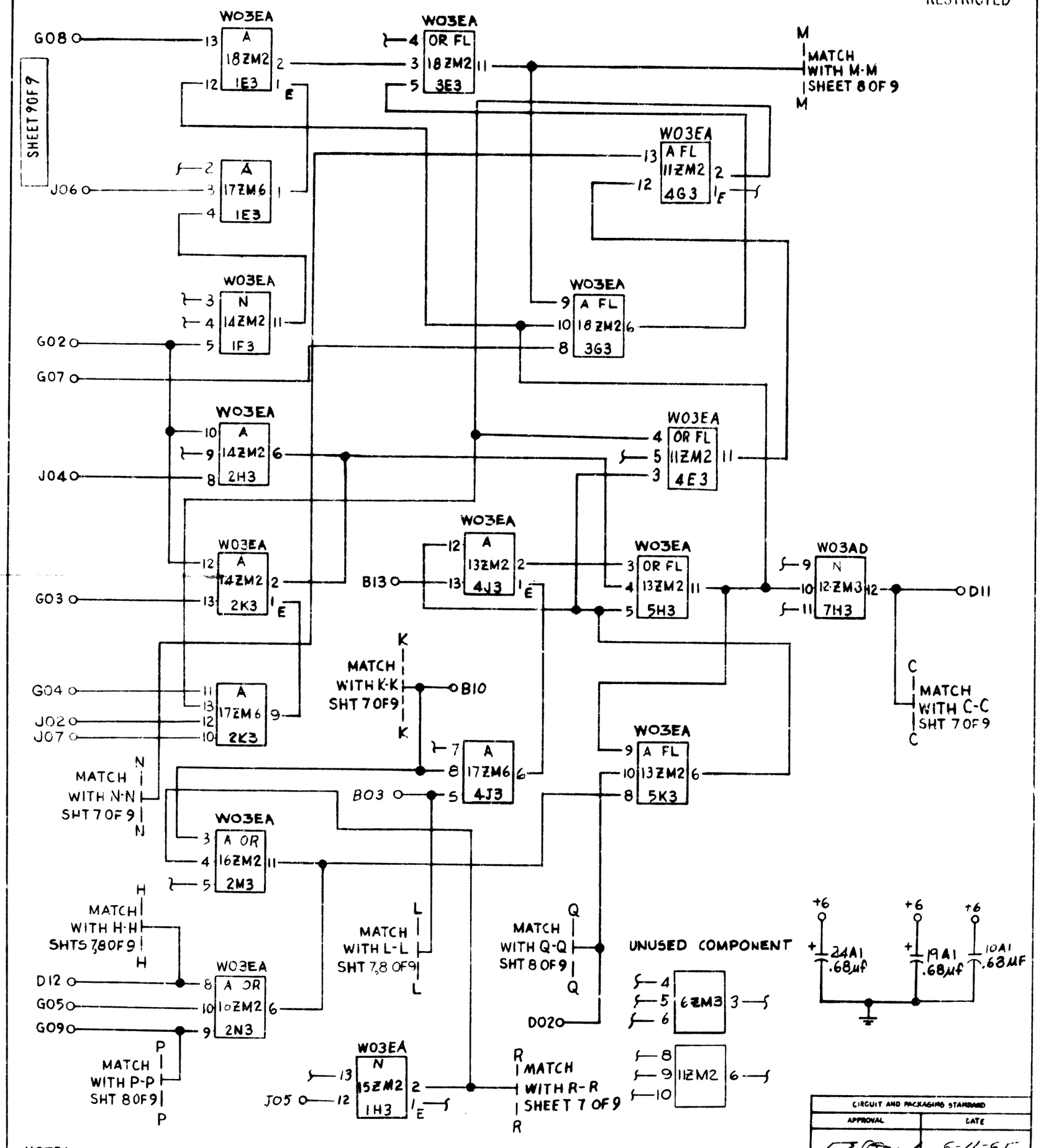

NOTE:

SERVICE VOLTAGES FOR MONOLITHIC MODULES ARE: +6V-PIN 7, GND-PIN 14.

CIRCUIT AND PACKAGING STANDARD	
APPROVAL	DATE
J. E. Rowe	6-11-67

INTERNATIONAL BUSINESS MACHINES CORP.											
NAME	CARD ASM-RECEIVE SOR ODD/EVEN BDC, RTL, RCL, SEND REPLY										
DESIGN	J.G. 4-8-65	MODEL	2701-SB								
DETAIL	J.G. 4-8-65										
CHECK	D.L. 4-8-65	DRAW	E.J.S. 5-5-65								
APPRD	J.S. 6-11-65	CHECK	R.J. 8-5-65								

DATE	CHANGE NO.		DATE	CHANGE NO.
9-12-65	165357	A		
16DEC65	166129	B		
31JAN66	167114	C		

NOTE
X PRINT TO ENG. SPEC. NO.
895291

DEVELOPMENT NO.
680-1103

5801652

5801652