RESTRICTED

CARD CODE 1657 | 5801657

5801657 SHEET 6 OF 7

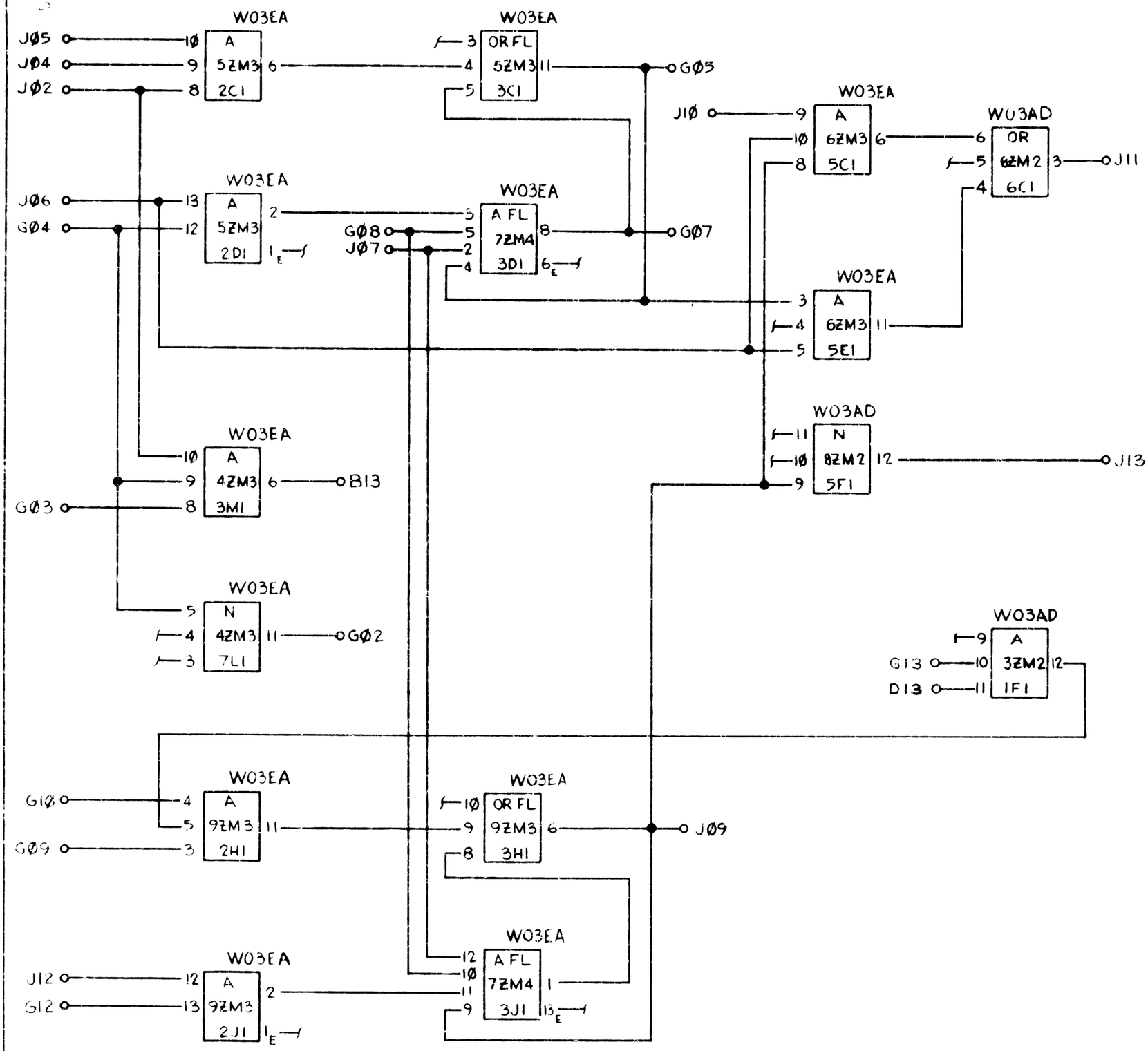

NOTE:
SERVICE VOLTAGES FOR MONOLITHIC MODULES ARE:
+6V-PIN 7, GND-PIN 14

VOLTAGE PIN BUSSING:
GND PINS D08 & T08 ARE BUSSED
+6V PINS B11 & G11 ARE NOT BUSSED

CIRCUIT AND PACKAGING STANDARD	
APPROVAL	DATE
J. T. O'Neill	6-22-67

INTERNATIONAL BUSINESS MACHINES CORP.				DATE	CHANGE NO.	DATE	CHANGE NO.	NOTE	DEVELOPMENT NO.
NAME	CARD ASM-TRAN LRC AND SEOTR			8-18-65	165324 A			X PRINT TO ENG. SPEC. NO. 895291	680-1114
DESIGN	R254-2269	MODEL	2701 SDA	15DEC65	166121 B				
DETAIL	R254-22-69								
CHECK	RS 6-12-67	DRAW	EJS 5-14-65						5801657
APPRO	JT 6-12-67	CHECK	RT 8-4-67						

5801657