THIS OLD HAS BEEN HAND CHECKED AGAINST THE WIRING 5801658

000 16881

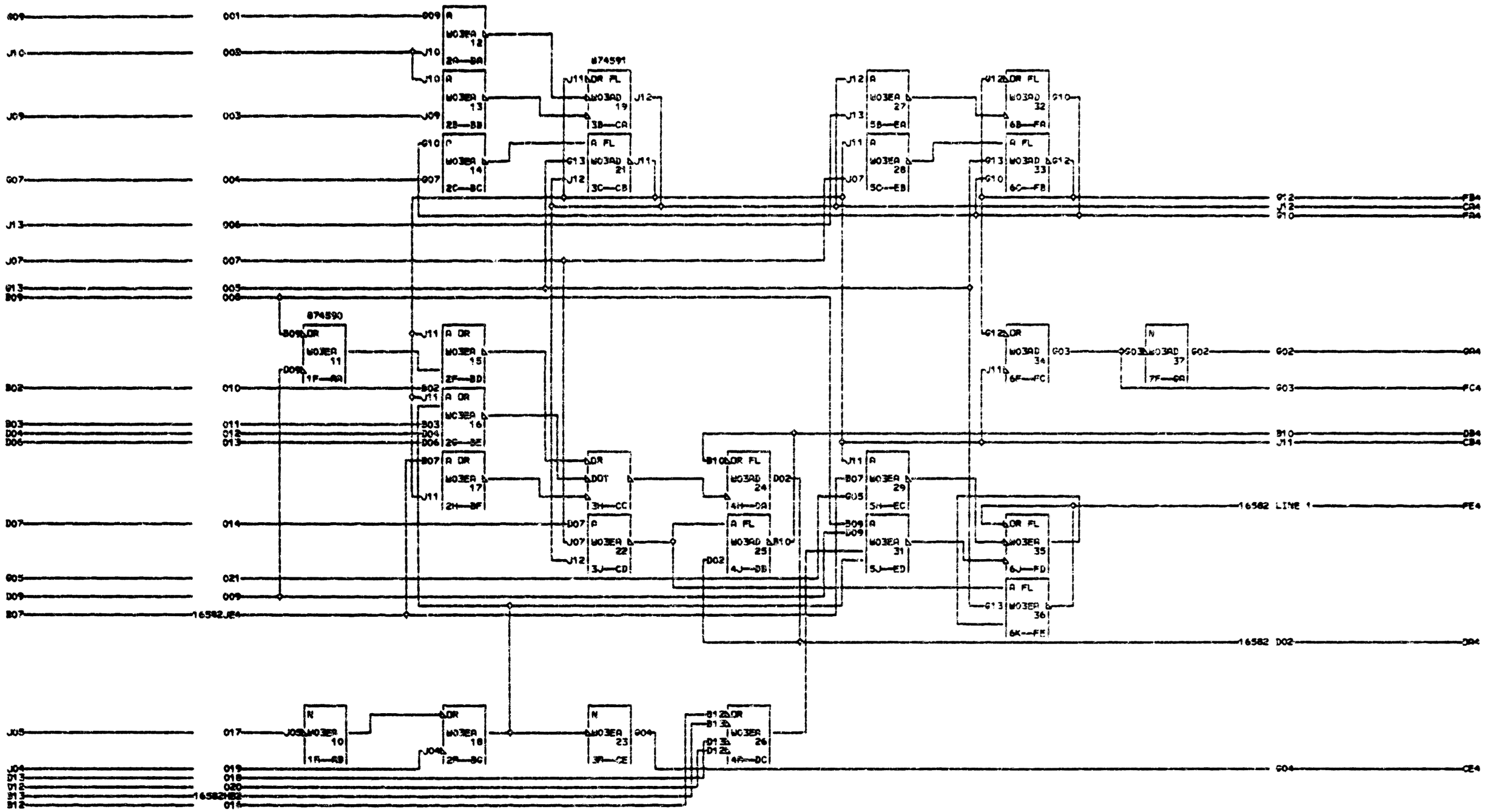

CARD SIZED 2-24 PRC W03
VOLTAGE PINS
1 +6VOB110011
6 GNDOOOB0J08
5 SPECIAL RESTRICTED
8
1

000

13-02-65 166117 B
03-23-66 167155 C

CHANGE OF DIRECTION
AND RECEIVE SINGLE SHOT
DATE 00-00-00 MACH. ASSEMBLY
LOG 178 FRAME
CD PG 1 OF 2 P.N. 5801658
IBM CORP. KK BLK. GB

000