5801658

RESTRICTED

CARD CODE 1658

5801658

SHEET 6 OF 7

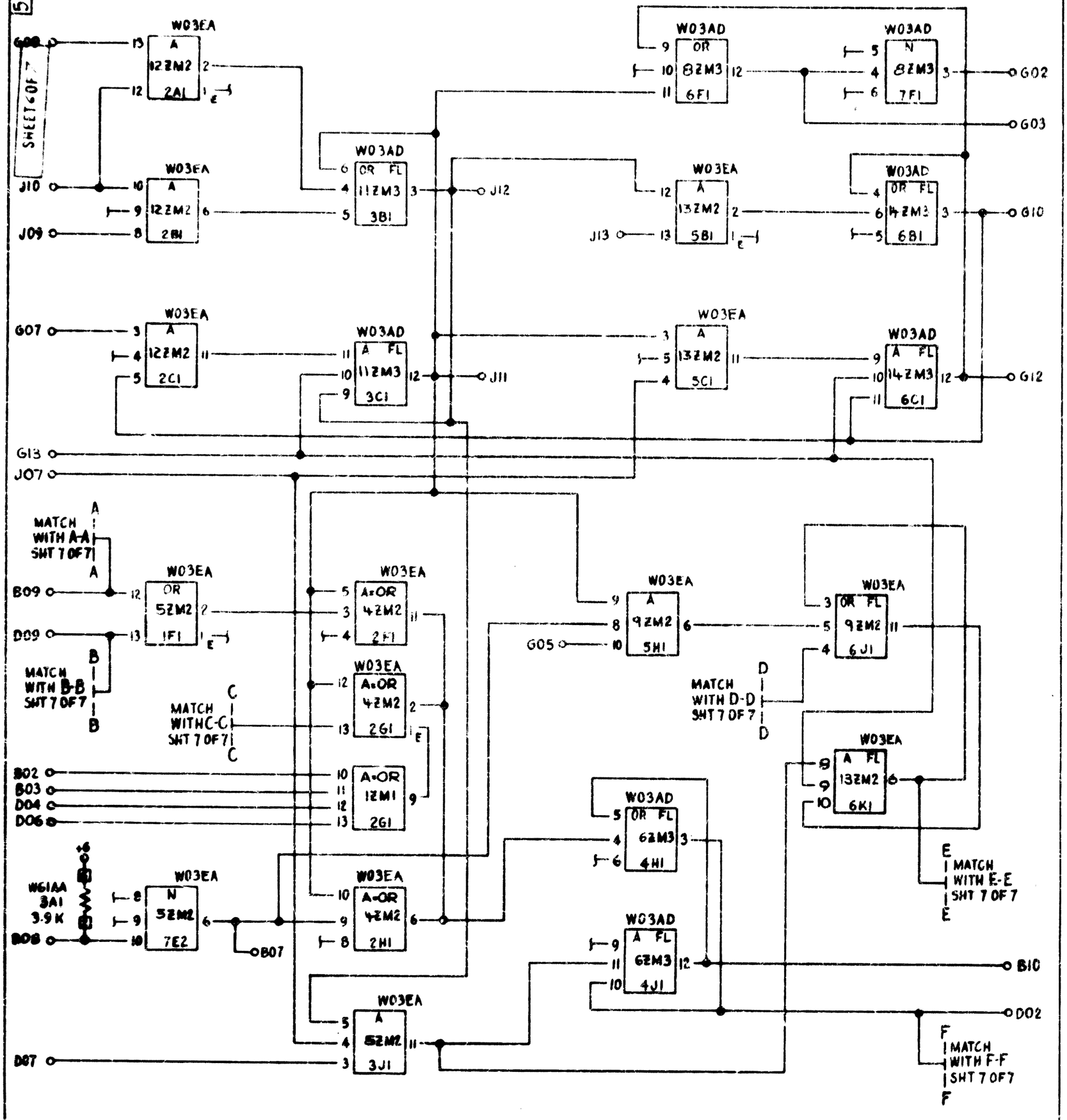

NOTE:
SERVICE VOLTAGES FOR MONOLITHIC MODULES ARE:

+6V - PIN 7
GND - PIN 14

J08 - D08 ARE BUSSED

B11 - G11 ARE NOT BUSSED

CIRCUIT AND PACKAGING STANDARD	
APPROVAL	DATE
J.E. Shark	6-15-65

INTERNATIONAL BUSINESS MACHINES CORP.	DATE	CHANGE NO.	DATE	CHANGE NO.
NAME CARD ASSY-CHARGE & DISTRIBUTION AND DISPLAY SHIFT REG	8-26-65	165361=A		
DESIGN J.G. MODEL 2701-5DM	2DEC65	166117 B		
DETAIL J.G.	25MAR66	167155 C		
CHECK D.S. DRAW				
APPRO DESIGN				

NOTE	DEVELOPMENT NO.
X PRINT TO ENG. SPEC. NO. 895291	680-1115
	5801658

5801658