5801658

RESTRICTED

CARD CODE 1658

5801658

SHEET 7 OF 7

SHEET 7 OF 7

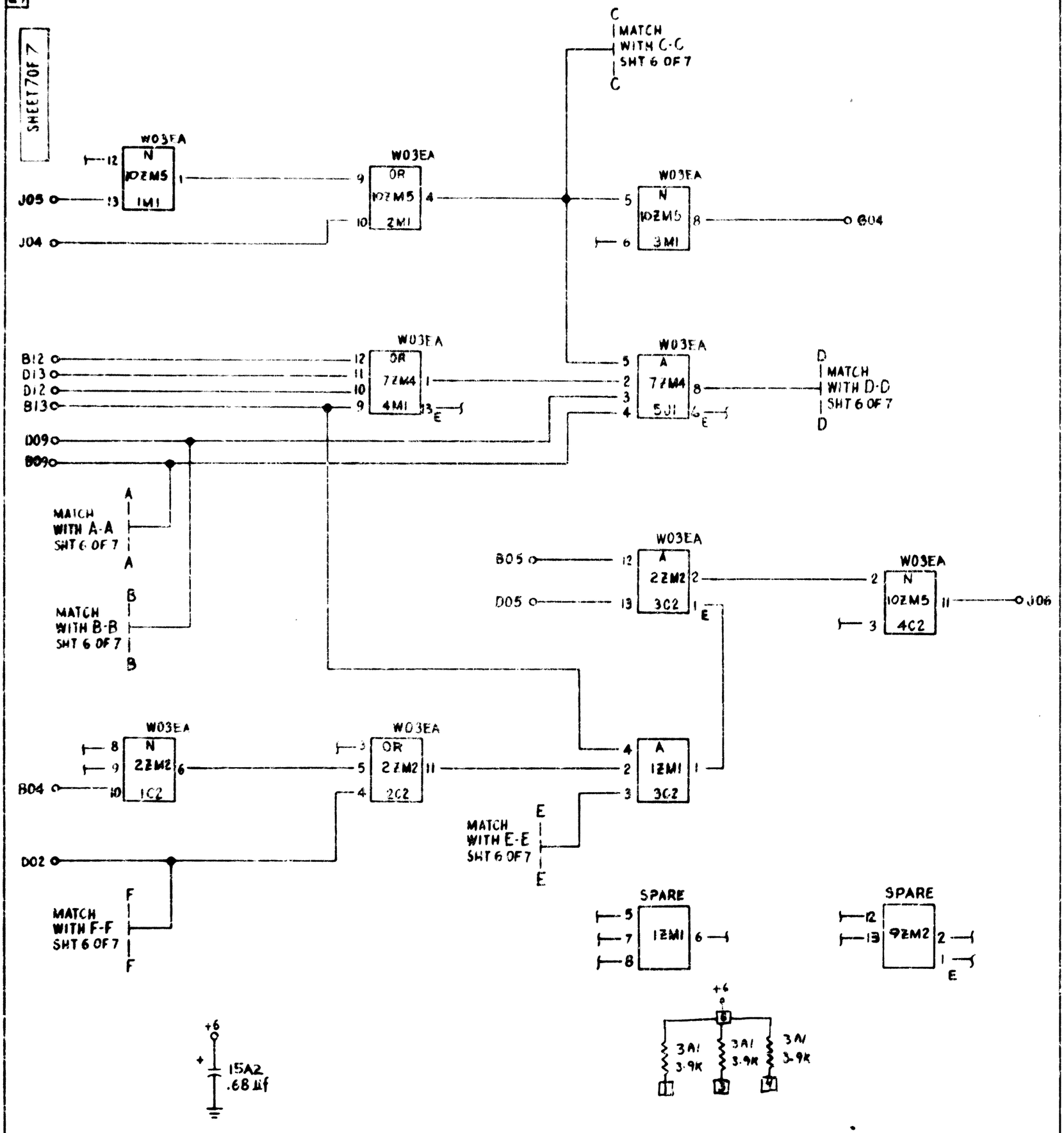

NOTE:
SERVICE VOLTAGES FOR MONOLITHIC MODULES ARE: +6V-PIN 7
GND-PIN 14

CIRCUIT AND PACKAGING STANDARD	
APPROVAL	DATE
JE Shaul	6-15-65

INTERNATIONAL BUSINESS MACHINES CORP.	DATE	CHANGE NO.	DATE	CHANGE NO.
NAME CARD MAN-CHANGE OF DIRECTION AND RECEIVE SINGLE SHOT	8-26-65	165361=A		
DESIGN J.G. 4-27-65 MODEL 2701-3DM	20DEC65	166117 B		
DETAIL J.G. 4-27-65	23MAR66	167155 C		
CHECK				
APPRO				

NOTE
X PRINT TO ENG. SPEC. NO.
895291

DEVELOPMENT NO.
680-1115

5801658

5801658