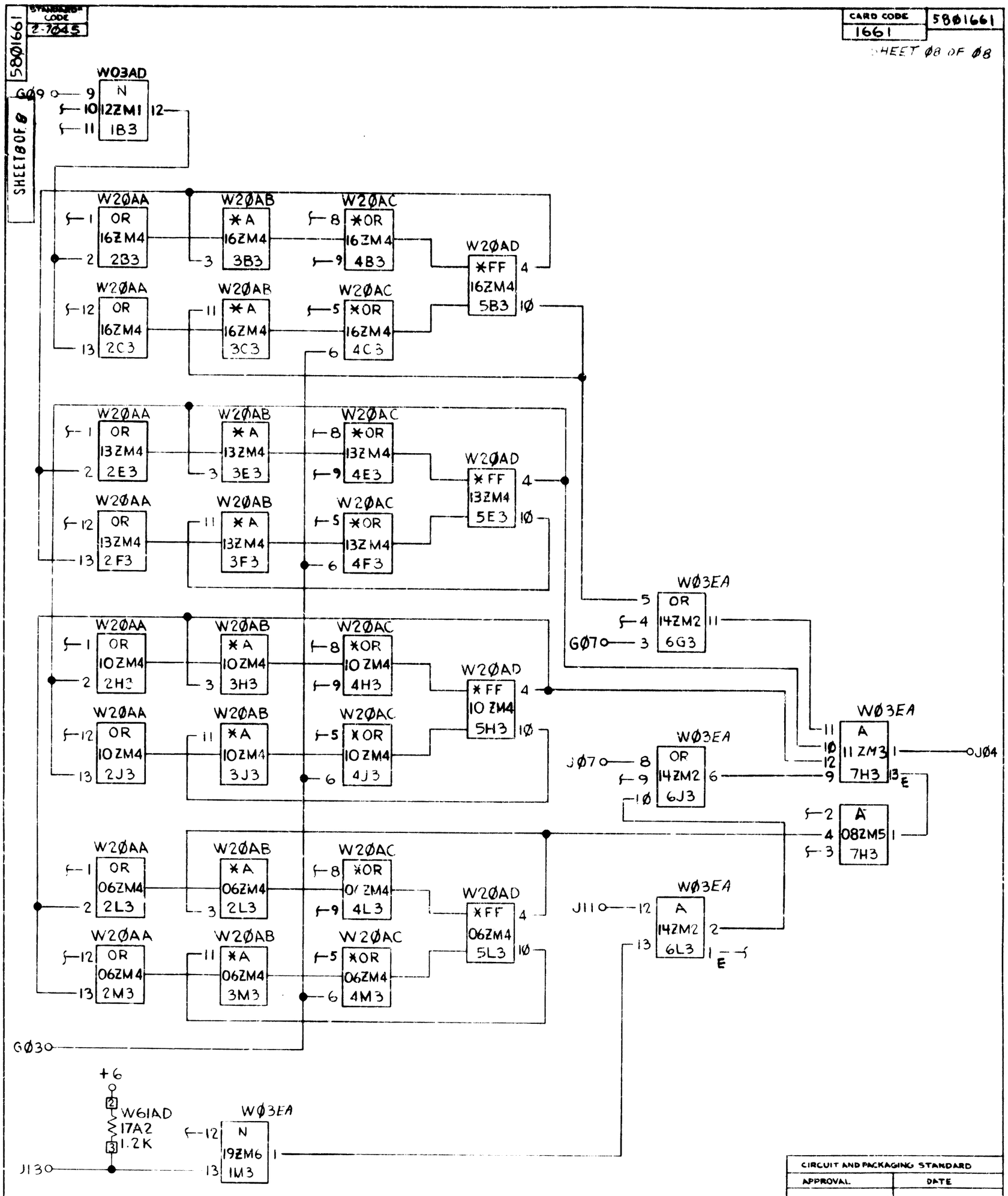

NOTE: SERVICE VOLTAGES FOR ALL MONOLITHIC MODULES ARE:
+6V - PIN 7
GND - PIN 14

CIRCUIT AND PACKAGING STANDARD	
APPROVAL	DATE
[illegible]	6-11-65

INTERNATIONAL BUSINESS MACHINES CORP.				DATE	CHANGE NO.		DATE	CHANGE NO.	NOTE	DEVELOPMENT NO.
NAME	CARD ASM-CHAR PHASE, REQ			8-18-65	165325	A			X PRINT TO ENG. SPEC. NO.	680-1118
TO SEND, AND REC TEST CHAR COUNTER				17DEC65	166128	B			895291	
DESIGN	RMS	4-22-65	MODEL	2701-50A						
DETAIL	RMS	4-22-65								
CHECK	DG	5-10-65	DRAW	EJS 5-10-65						5801661
APPRO.	JS	6-11-65	CHECK	WW 8-5-65						

5801661