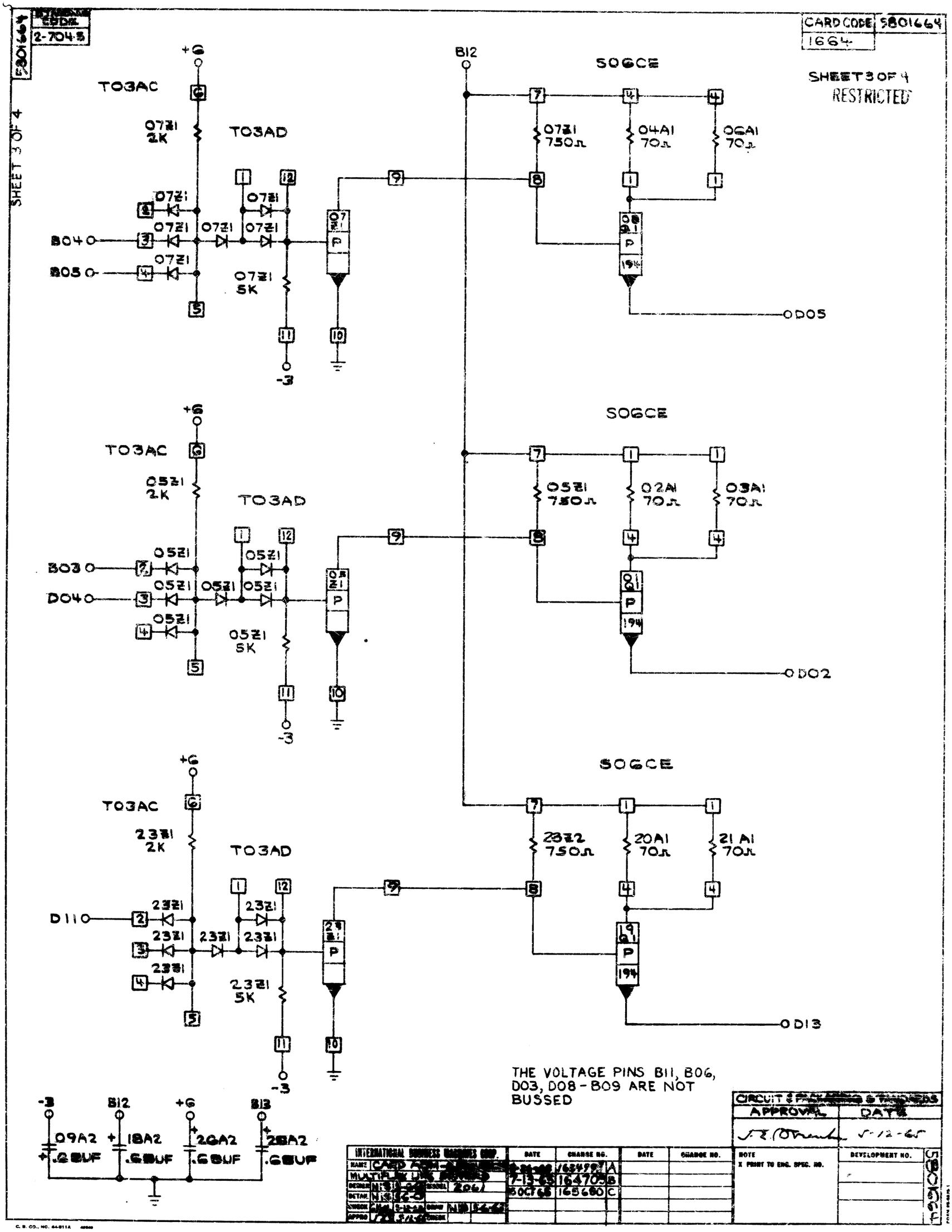
CARD CODE 5801664
1664
SHEET 3 OF 4
RESTRICTED
SHEET 3 OF 4
+6
B12
TO3AC
TO3AD
SO6CE
07Z1 2K
07Z1 5K
07Z1 750Ω
04A1 70Ω
06A1 70Ω
B04
B05
D05
-3
05Z1 2K
05Z1 5K
05Z1 750Ω
02A1 70Ω
03A1 70Ω
B03
D04
D02
23Z1 2K
23Z1 5K
23Z2 750Ω
20A1 70Ω
21A1 70Ω
D11
D13
THE VOLTAGE PINS B11, B06, D03, D08 - B09 ARE NOT BUSSED
-3
B12
+6
B13
09A2 .2 BUF
18A2 .6 BUF
20A2 .6 BUF
28A2 .6 BUF
CIRCUIT & PACKAGING & TRACKS
APPROVAL
DATE
5-12-65
INTERNATIONAL BUSINESS MACHINES CORP.
NAME CARD FORM
MULTIPLEX UNIT
DESIGN
DETAIL
CHECK
APPRO
DATE
CHANGE NO.
7-13-65
30CT65
NOTE
X PRINT TO ENG. SPEC. NO.
DEVELOPMENT NO.
5801664