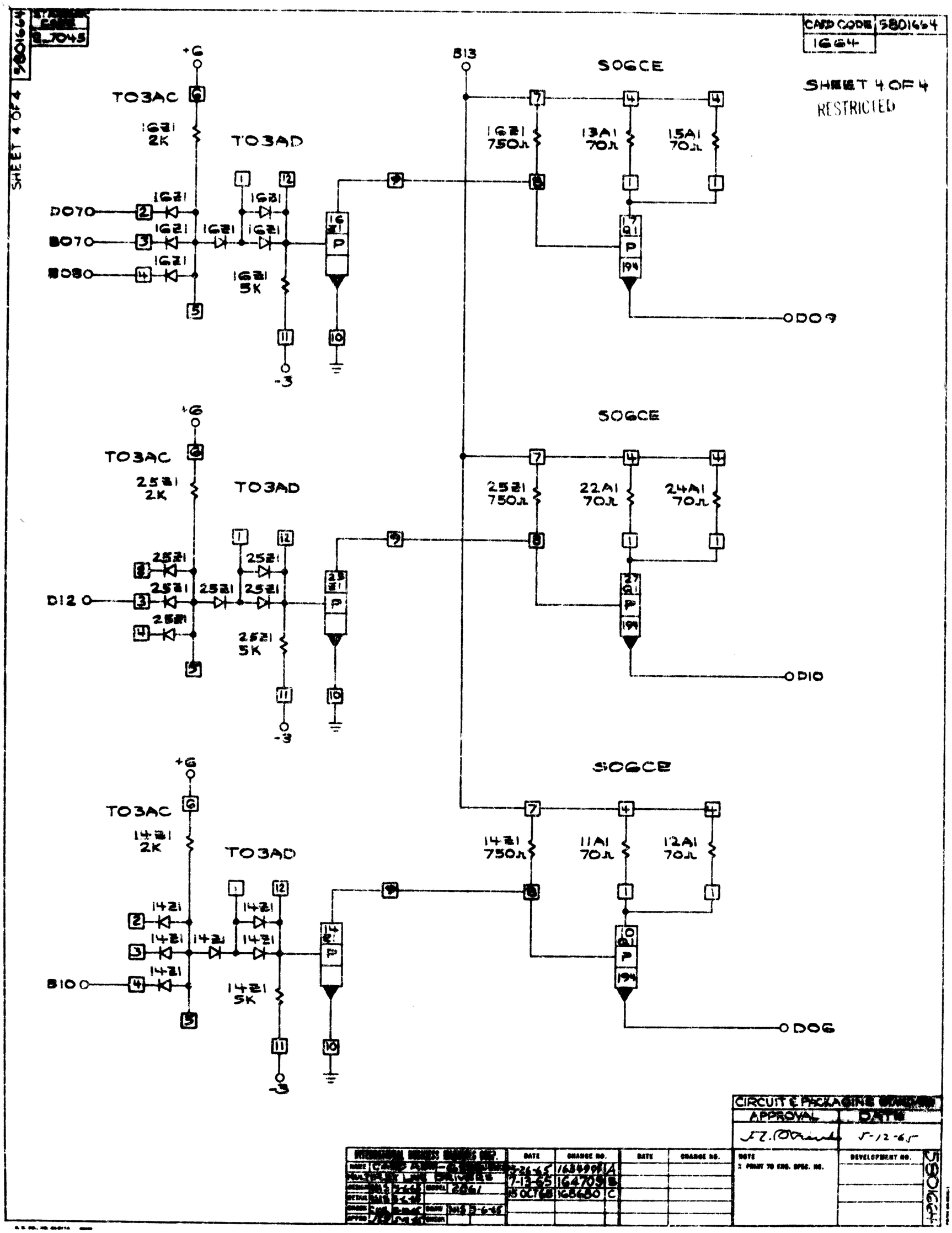
CARD CODE 5801664
1664
SHEET 4 OF 4
RESTRICTED
SHEET 4 OF 4
5801664
+6
TO3AC
TO3AD
1621
2K
1621
5K
D070
B070
B080
-3
B13
SOGCE
1621
750Ω
13A1
70Ω
15A1
70Ω
DO9
2521
2K
2521
5K
D12
2521
750Ω
22A1
70Ω
24A1
70Ω
DIO
1421
2K
1421
5K
B10
1421
750Ω
11A1
70Ω
12A1
70Ω
DO6
CIRCUIT & PACKAGING DIAGRAM
APPROVAL
DATE
5-12-65
DATE
DEVELOPMENT NO.
5801664