580 665

STANDARDS CODE

CARD CODE 1665

5801665

Sheet 5 of 5

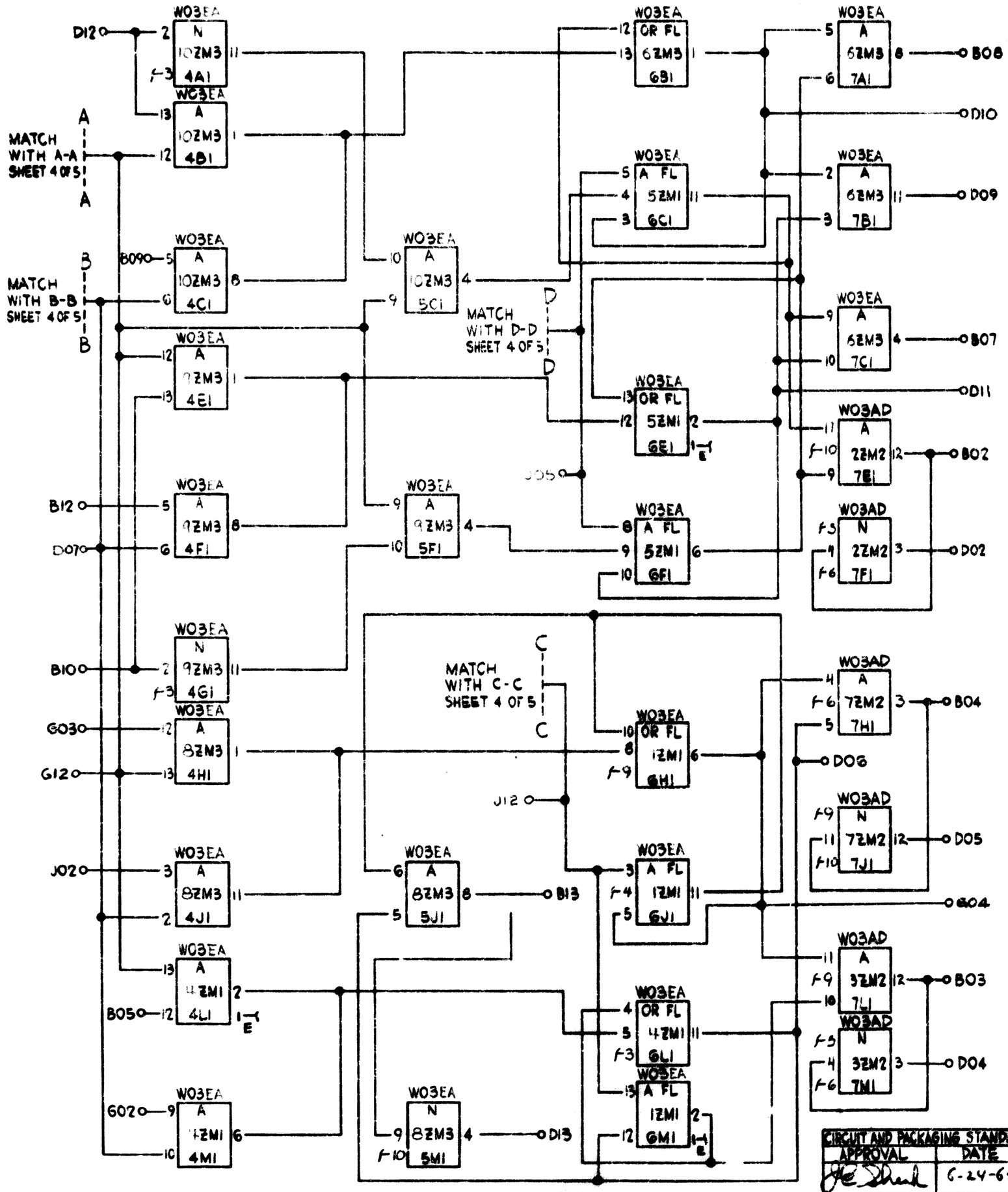

NOTE: SERVICE VOLTAGES FOR MONOLITHIC MODULES ARE; +6 - PIN 7, GND - PIN 14.

CIRCUIT AND PACKAGING STANDARD	
APPROVAL	DATE
	6-24-65

DATE	CHANGE NO.		DATE	CHANGE NO.
9-10-65	165358	A		
8 DEC 65	166145	B		
6 APR 66	187153	C		

NOTE: X PRINT TO SUB. SPEC. NO. 895291

DEVELOPMENT NO. 680-1134

5801665

580 1665