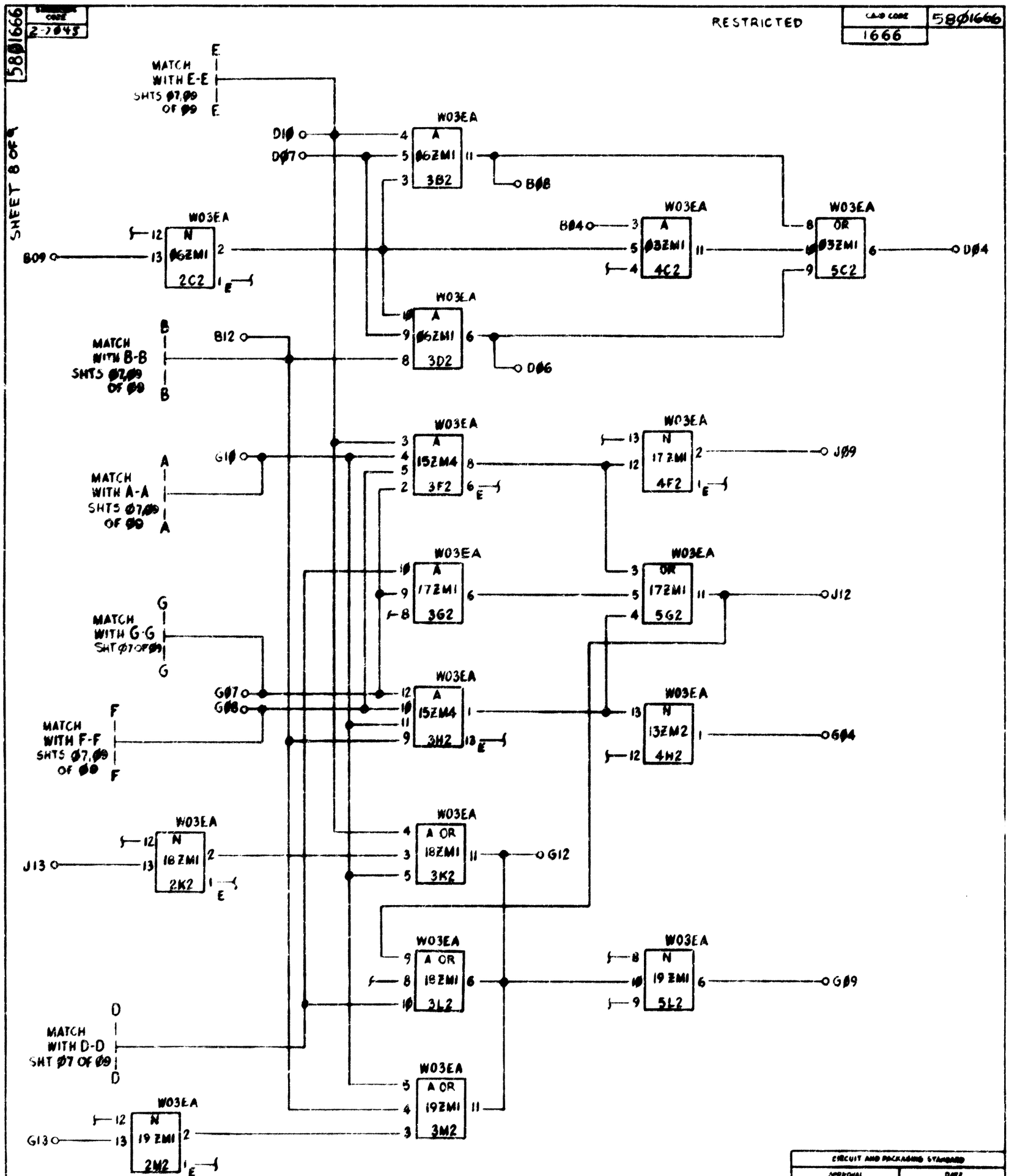

NOTE: SERVICE VOLTAGES FOR MONOLITHIC MODULES ARE: +6V-PIN 7, GND-PIN 14;

CIRCUIT AND PACKAGING STANDARD	
APPROVAL	DATE
S R Ohnert	6-22-65

INTERNATIONAL BUSINESS MACHINES CORP.				DATE	CHANGE NO	DATE	CHANGE NO
NAME	CARD ASM - DATA SET INTERFACE GATING			20 DEC 65	165326 A		
DESIGN	EJS 5-14-65	MODEL	27 01-9A	21 DEC 65	166127 B		
DETAIL	EJS 5-14-65						
CHECK	WN 6-21-65	DRAW	EJS 5-18-65				
APPRO	RSO 22-65	CHECK					

NOTE: X PRINT TO ENG. SPEC. NO. 895291

DEVELOPMENT NO. 680-1135

5801666

5801666