5801673

STANDARDS CODE 2-7045

ARD CODE 1673

5801673

SHEET 6 OF 7

RESTRICTED

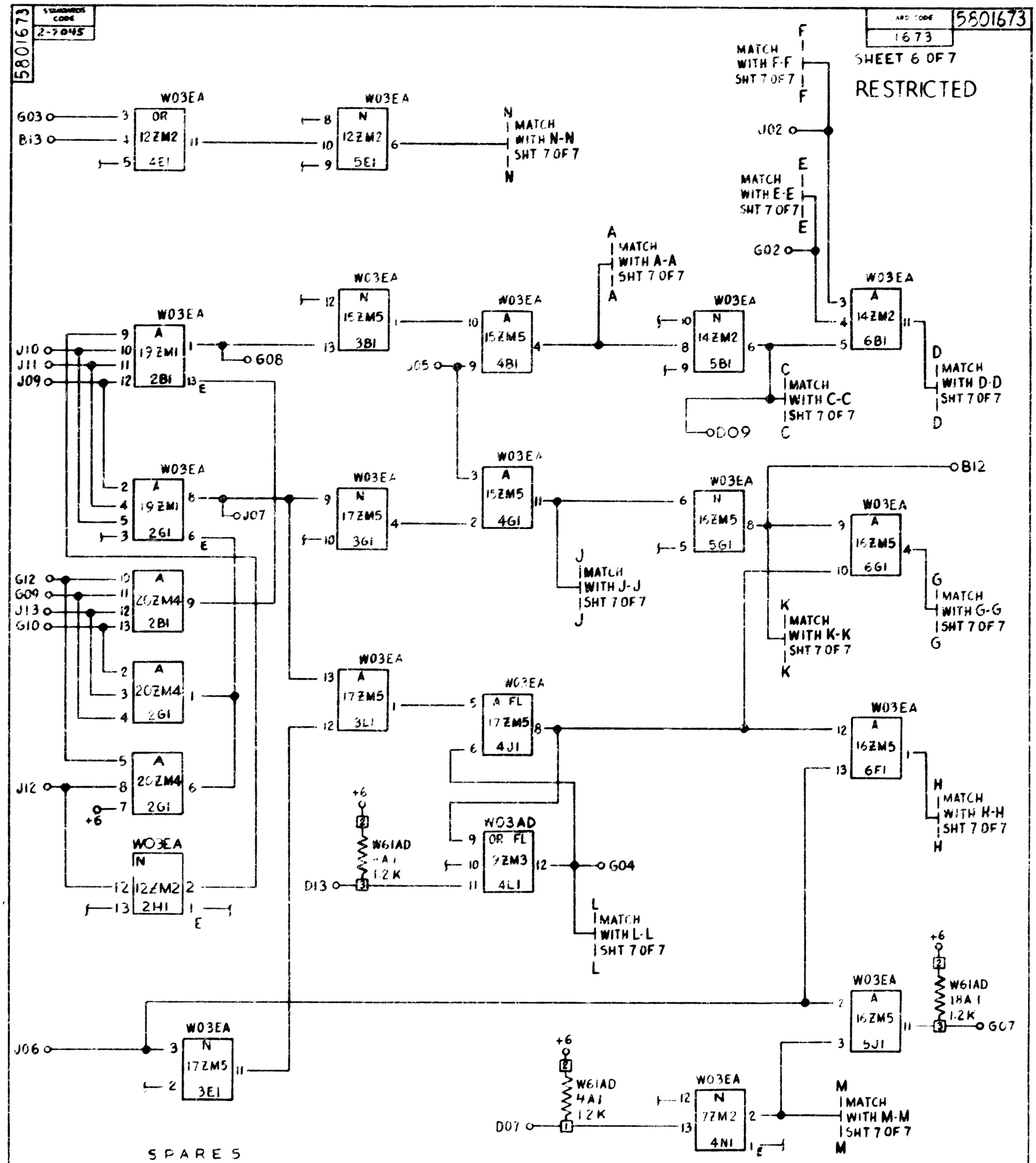

CIRCUIT AND PACKAGING STANDARD	
APPROVAL	DATE

| INTERNATIONAL BUSINESS MACHINES CORP. | | |