5801674 STANDARDS CODE 2-7045

CARD CODE 1674 5801674

SHEET 8 OF 11

RESTRICTED

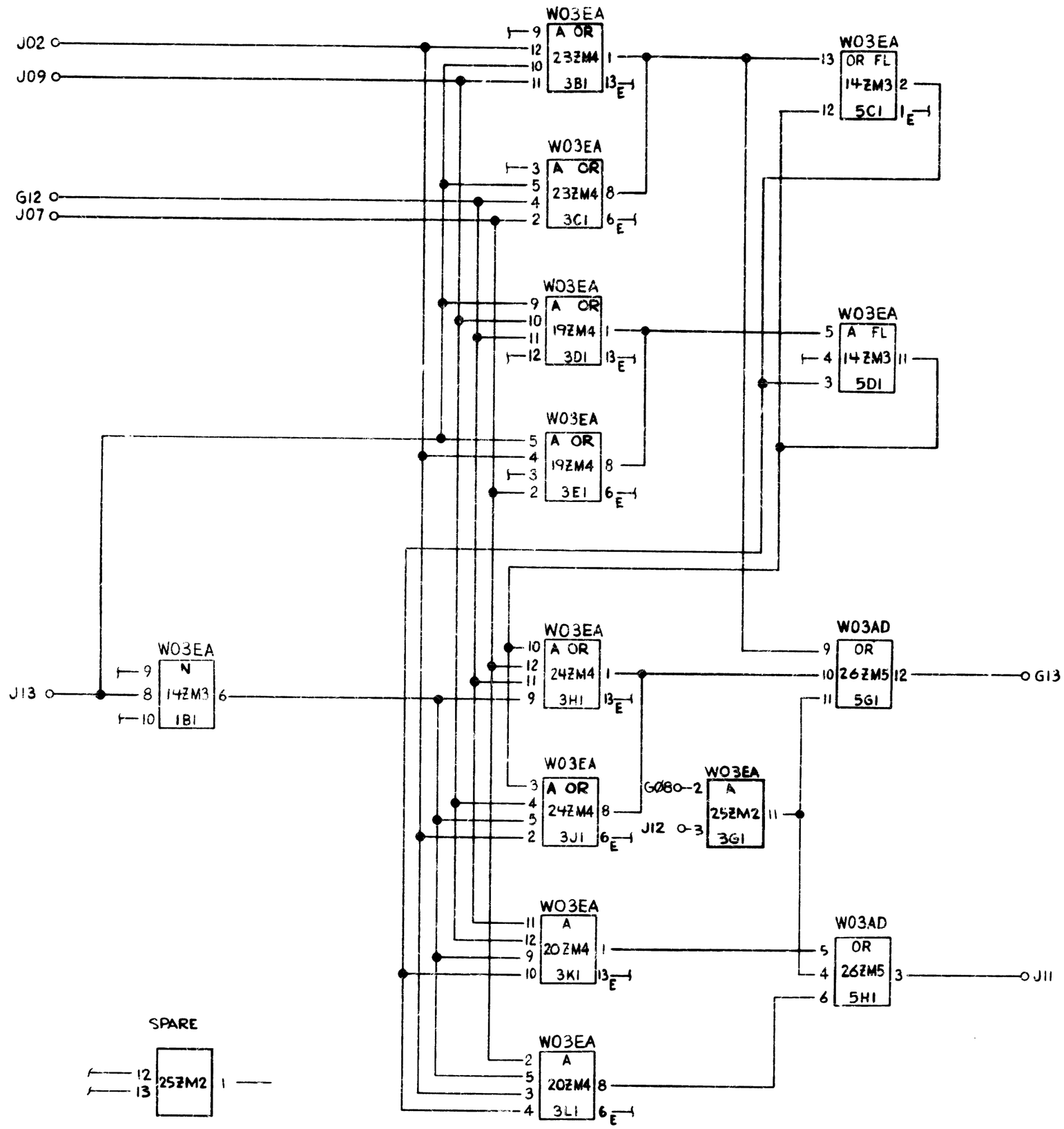


J08-D08 ARE BUSSED
B11-G11 ARE NOT BUSSED

NOTE: SERVICE VOLTAGES FOR ALL MONOLITHIC MODULES ARE:
+6V-PIN 7
GND-PIN 14

| CIRCUIT AND PACKAGING STANDARD | |
|---|---|
| APPROVAL | DATE |
| [illegible] | 8-31-65 |

| INTERNATIONAL BUSINESS MACHINES CORP. | | | | | | | | | | | | | | | | | |
|---|---|---|---|---|---|---|---|---|---|---|---|---|---|---|---|---|---|
| NAME | CARD ASM-TRANS CLOCK AND ADC LOGIC | | | | | | | | | | | | | | | | |
| DESIGN | E JS | 7-19-65 | MODEL | 2701-SDA | | | | | | | | | | | | | |
| DETAIL | E JS | 7-19-65 | | | | | | | | | | | | | | | |
| CHECK | W.N. | 7-27-65 | DRAW | E JS | 7-20-65 | | | | | | | | | | | | |
| APPRO | [illegible] | 8-31-65 | CHECK | RJ | 8-31-65 | | | | | | | | | | | | |

| DATE | CHANGE NO. | | DATE | CHANGE NO. |
|---|---|---|---|---|
| 5-14-65 | 165645 | A | | |
| 29DEC65 | 166138 | B | | |

NOTE
X PRINT TO ENG. SPEC. NO.
895291

DEVELOPMENT NO.
680-1157

5801674

5801674

FORM 25-6179-1

C B CO. NO 46-811A 42849