STANDARDS CODE 2-7045

5801674 SHEET 11 OF 11

CARD CODE 1674 5801674

RESTRICTED

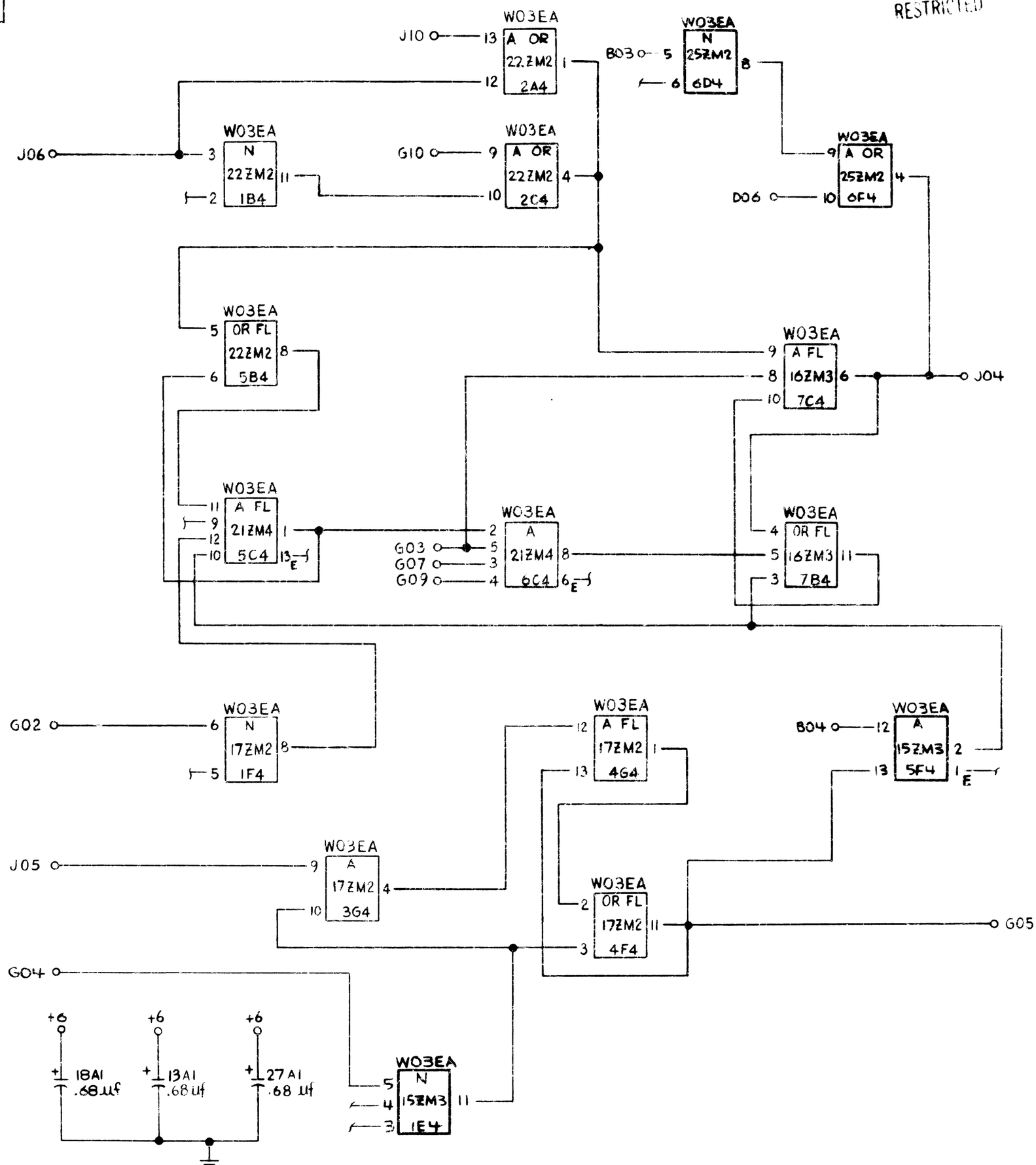

NOTE: SERVICE VOLTAGES FOR ALL MONOLITHIC MODULES ARE:
+6V - PIN 7
GND - PIN 14

CIRCUIT AND PACKAGING STANDARD	
APPROVAL	DATE
[illegible]	8-[illegible]-65

INTERNATIONAL BUSINESS MACHINES CORP.						DATE	CHANGE NO.		DATE	CHANGE NO.
NAME	CARD ASM- TRANS CLOCK AND ADC LOGIC					[illegible]	165645	A		
						29DEC65	166138	B		
DESIGN	E JS	7-19-65	MODEL	2701 SDA						
DETAIL	E JS	7-19-65								
CHECK	W.N.	7-27-65	DRAW	E JS	7-20-65					
APPRO	[illegible]	8-[illegible]-65	CHECK	RJ	8-31-65					

NOTE
X PRINT TO ENG. SPEC. NO.
895291

DEVELOPMENT NO. 680-1157

5801674

5801674