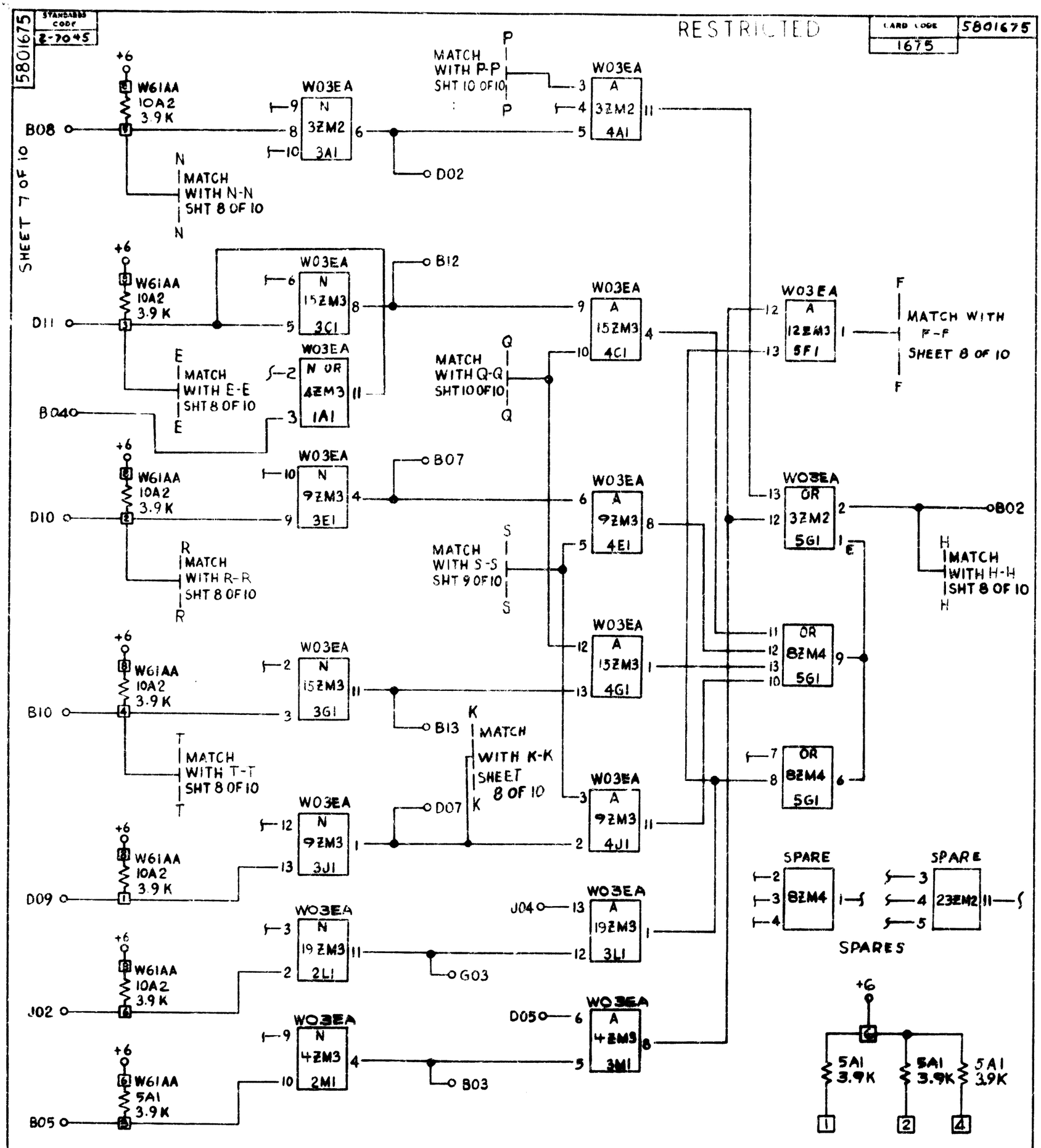

J08-D08 ARE BUSSED
B11-G11 ARE NOT BUSSED

NOTE: SERVICE VOLTAGES FOR MONOLITHIC MODULES ARE:
+6V - PIN 7
GND - PIN 14

CIRCUIT AND PACKAGING STANDARD	
APPROVAL	DATE
	7-26-65

INTERNATIONAL BUSINESS MACHINES CORP.											
NAME	CARD ASM - RECEIVER AND CONTROLS					DATE	CHANGE NO.		DATE	CHANGE NO.	
DESIGN	EJS	6-28-65	MODEL	270		9-22-65	169653	A			
DETAIL	EJS	6-28-65				16 DEC 65	166137	B			
CHECK		7-21-65	DRAW	EJS	6-30-65	26 APR 66	167772	C			
APPRO		7-26-65	CHECK		7-8-65						

NOTE
X PRINT TO ENG. SPEC. NO.
895291

DEVELOPMENT NO.
680-1158

5801675

5801675