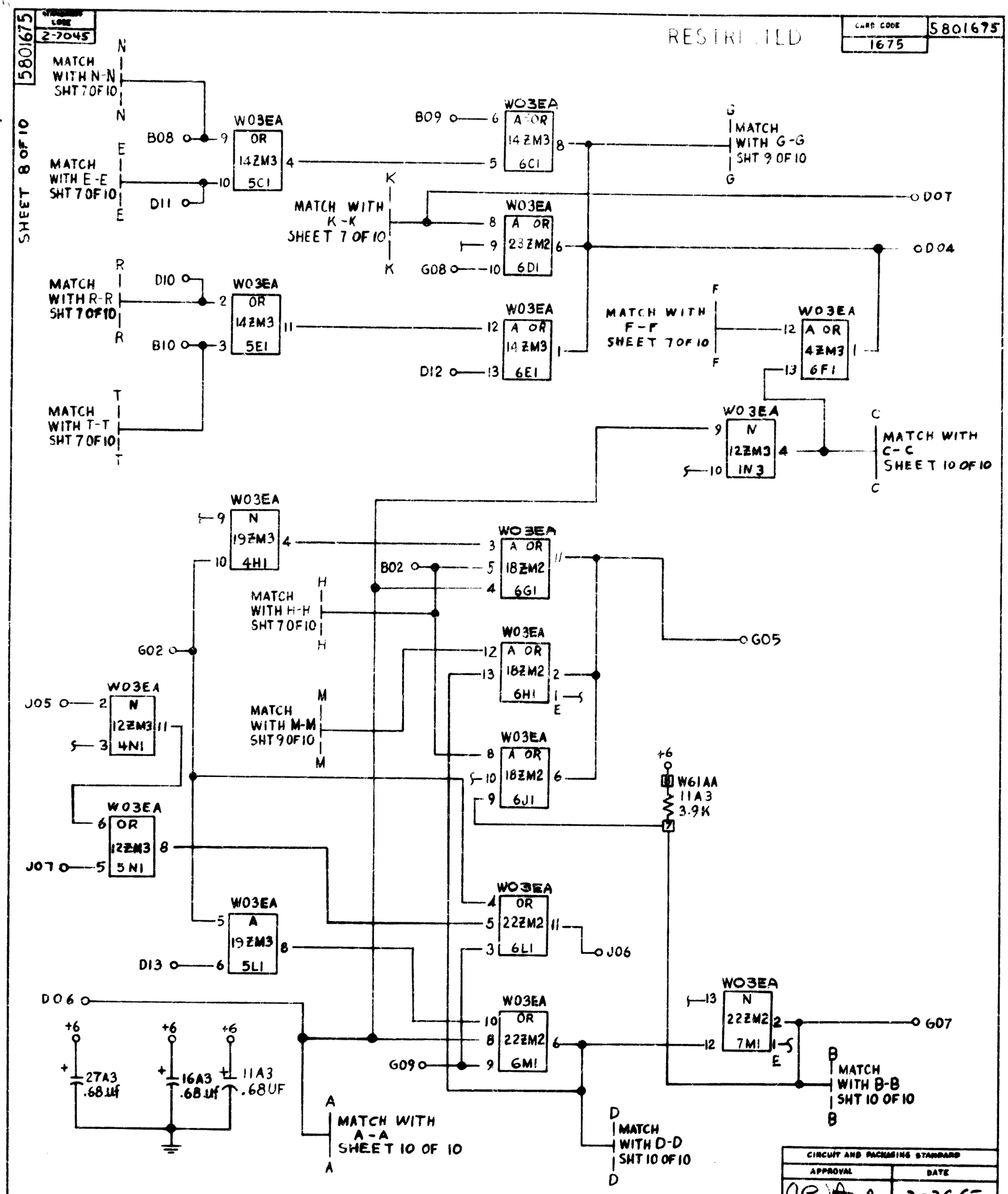

NOTE: SERVICE VOLTAGES FOR MONOLITHIC MODULES ARE:
+6V - PIN 7
GND - PIN 14

INTERNATIONAL BUSINESS MACHINES CORP.									
NAME	CARD ASM - RECEIVER AND CONTROLS			DATE	CHANGE NO.	DATE	CHANGE NO.	NOTE X PRINT TO ENG. SPEC. NO. 895291	DEVELOPMENT NO. 680-1158
DESIGN	E.J.S. 6-28-65	MODEL	2701-[illegible]	9-22-65	165653 A				
DETAIL	E.J.S. 6-28-65			16 DEC 65	166137 B				
CHECK	W.A.A. 7-2-65	DRAW	E.J.S. 6-29-65	26 APR 66	167772 C				5801675
APPRO	[illegible] 7-2-65	CHECK	R.J. 7-8-65						

CIRCUIT AND PACKAGING STANDARD	
APPROVAL	DATE
J E Stenk	7-26-65

5801675