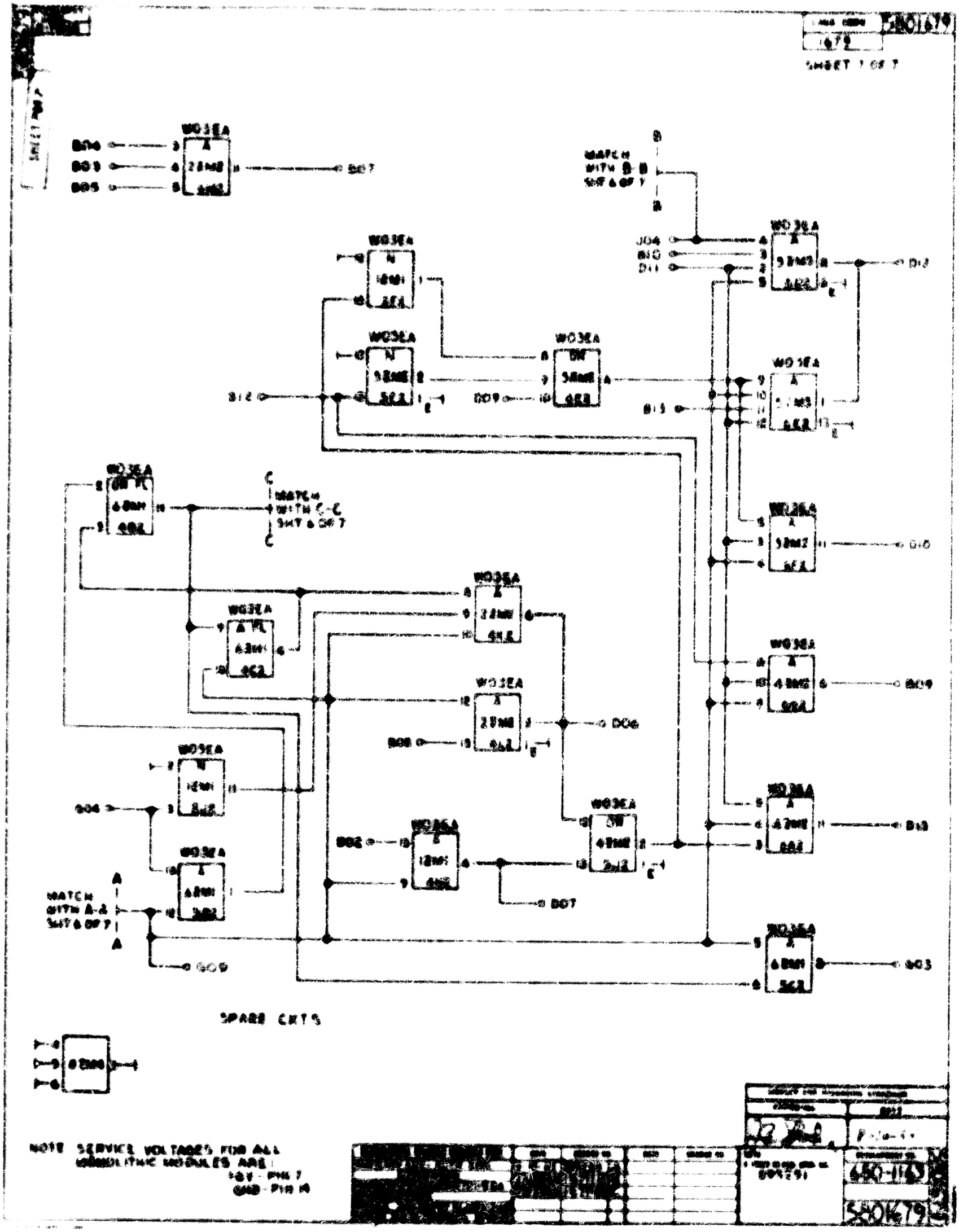
WO3EA
MATCH WITH B-B SHT 6 OF 7
MATCH WITH C-C SHT 6 OF 7
MATCH WITH A-A SHT 6 OF 7
SPARE CKTS
NOTE SERVICE VOLTAGES FOR ALL MONOLITHIC MODULES ARE:
+5V - PIN 7
GND - PIN 14