5801681

STANDARDS CODE 2-7045

RESTRICTED

CARD CODE 5801681 1681

SHEET 7 OF 7

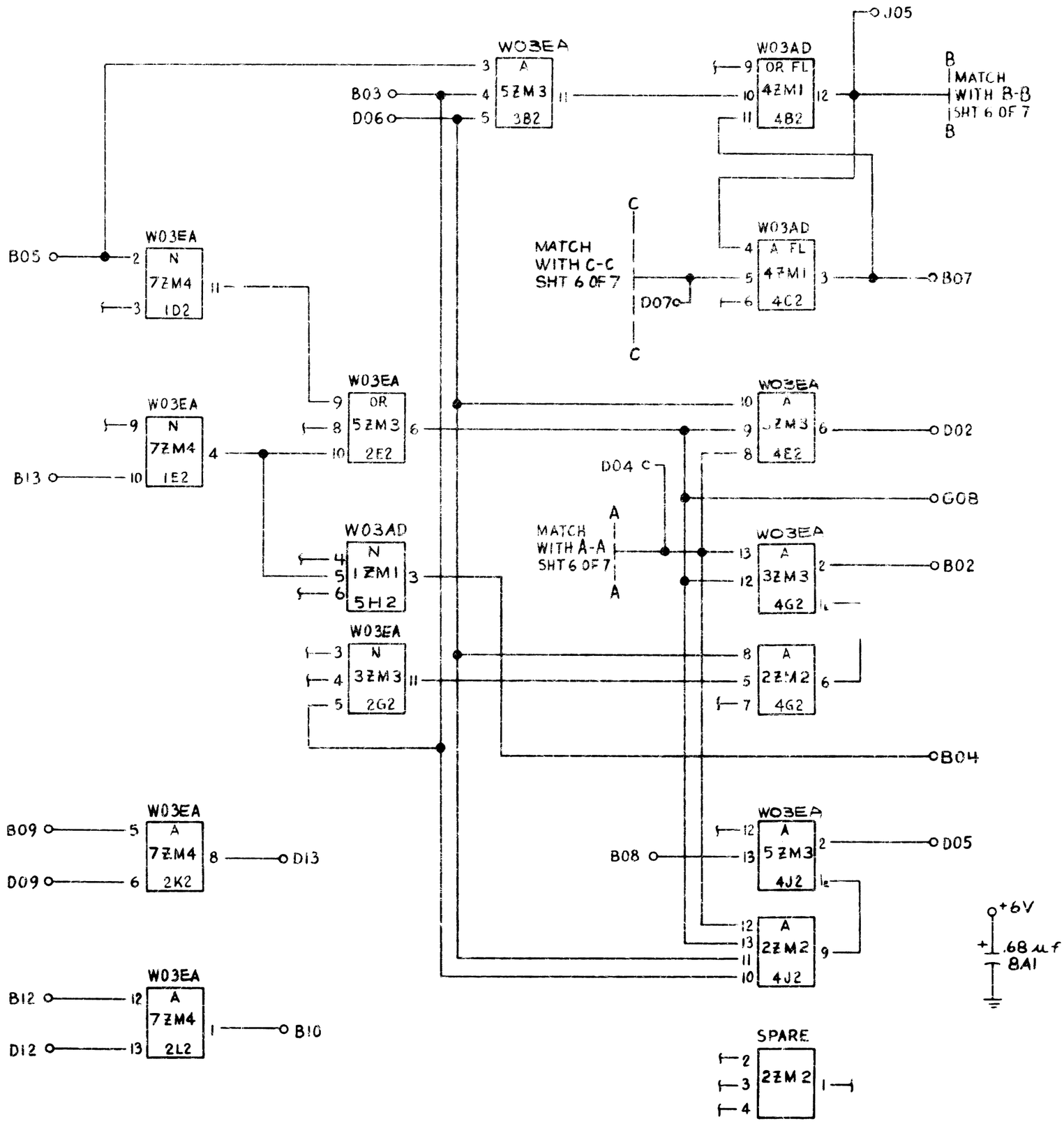

NOTE: SERVICE VOLTAGES FOR MONOLITHIC MODULES ARE:
+6V - PIN 7
GND - PIN 14

CIRCUIT AND PACKAGING STANDARD	
APPROVAL	DATE
J E Stark	8-30-65

INTERNATIONAL BUSINESS MACHINES CORP.					DATE	CHANGE NO.		DATE	CHANGE NO.
NAME	CARD ASM - DATASET				5-13-65	165647	A		
READY AND SET MODE RETENTION					28DEC65	165661	B		
DESIGN	E.J.S	6-7-65	MODEL	2701-SDA	23 MAR66	167156	C		
DETAIL	E.J.S	6-7-65							
CHECK	R.J	7-6-65	DRAW	E.J.S	6-8-65				
APPRO	J.E.S	7-8-65	CHECK	R.J	8-30-65				

NOTE
X PRINT TO ENG. SPEC. NO.
895291

DEVELOPMENT NO.
680-1165

5801681

5801681

C. B. CO., NO. 66-611A 68640