| | | | | | |
|---|---|---|---|---|---|
| STANDARDS CODE | 2-7045 | | | SHEET 2 OF 6 | 5801682 |
| CIRCUIT APPROVAL | JES | 08-04-65 | | STATUS | ACTIVE |
| LOCATION | KINGSTON | | | | RESTRICTED |
| RAW CARD NUMBER | 5819316 2 | | | HOLE PATTERN | 5819316 |
| FRONT ARTWORK | DATE | CHANGE NO. | | DATE | CHANGE NO |
| 5819316 | 09-14-65 | 165641 | A | | |
| BACK ARTWORK | 11-30-65 | 166119 | B | | |
| 5819316 | | | | | |

| PIN | VOLT. |
|---|---|
| B11 | + 6 |
| G11 | + 6 |
| D08 | GND |
| J08 | GND |

| CODE | PART NO | VALUE | QTY |
|---|---|---|---|
| A 1 | 2414883 | RC MODULE | 1 |
| ZM 1 | 2389901 | 4-2 WAY AI | 6 |
| ZM 2 | 2389900 | 1-2 WAYOR-3 WAY AI | 3 |
| ZM 3 | 2389902 | DIODE EXTENDER | 1 |
| ZM 4 | 2389904 | 2-3 WAY API | 1 |
| ZM 5 | 2389903 | 2-4 WAY AI | 1 |

NOTES.

AA-ALL CIRCUITS MUST CONFORM TO ENG.SPEC. SHOWN ON SHEET 1.

AB-ASSEMBLE TO ENGINEERING SPECIFCATION 890913

AK-CARD HAS BEEN DECOUPLED 811800 IS NOT APPLICABLE.

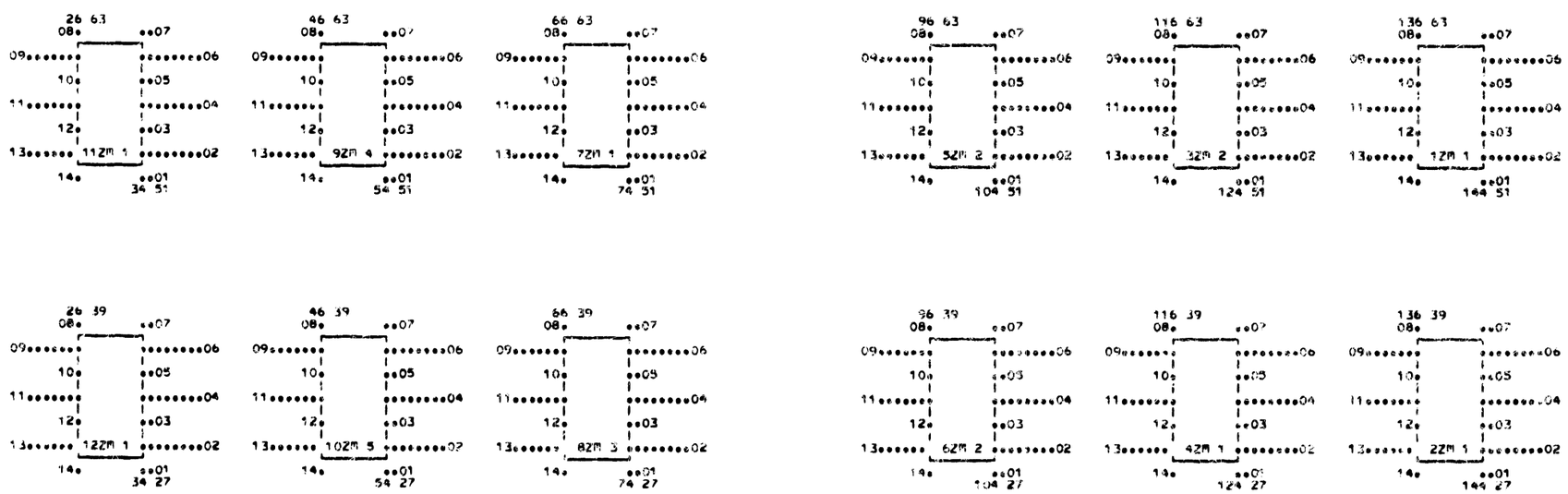


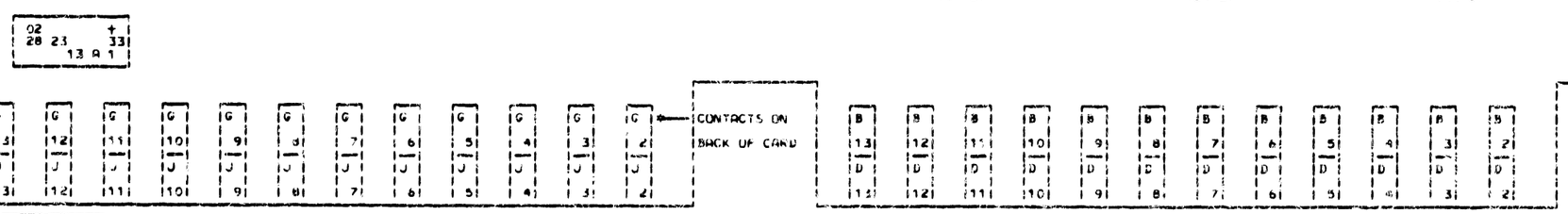


5801682 166119 B

INTERNATIONAL BUSINESS MACHINES CORP.

| | | | | | |
|---|---|---|---|---|---|
| NAME | CARD ASM-AUTO DIAL RATING | | | | |
| DESIGN | 07-27-65 | RT | TYPE | 2701-SDA | |
| DETAIL | 07-27-65 | RT | SCALE | NONE | |
| CHECK | 08-03-65 | RJ | DRAW | 7090 | 00-00-00 |
| APPRD | 08-04-65 | JES | L.C.N. | | LAMINATED |