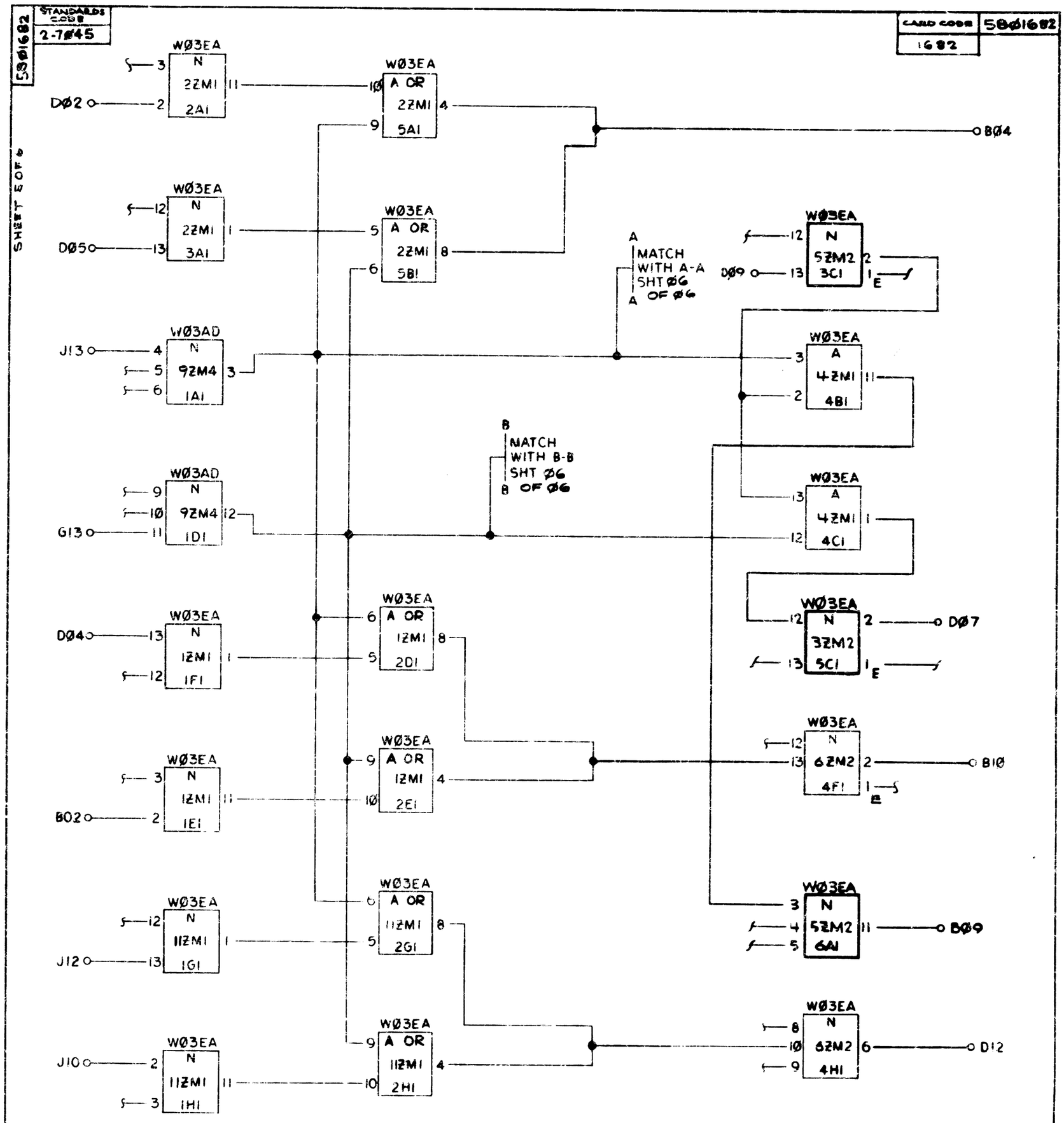

NOTE: SERVICE VOLTAGES FOR ALL MONOLITHIC MODULES ARE:
+6V - PIN7
GND - PIN14

J08-D08 ARE BUSSED
B11-G11 ARE NOT BUSSED

CIRCUIT & PACKAGING STANDARD	
APPROVAL	DATE
J E [illegible]	8-31-65

INTERNATIONAL BUSINESS MACHINES CORP.						DATE	CHANGE NO.	DATE	CHANGE NO.	NOTE	DEVELOPMENT NO.
NAME	CARD ASM. AUTO DIAL GATING					9-14-65	165641 A			X PRINT TO ENG. SPEC. NO. 895291	680-1166
DESIGN	AT	7-27-65	MODEL	2701-SDA		30NOV65	166119 B				
DETAIL	KH	7-27-65									
CHECK	AT	8-3-65	DRAW	AT	7-27-65						5801682
APPRO	[illegible]	8-31-65	CHECK	RJ	8-31-65						

5801682