THIS ALD HAS BEEN HAND CHECKED AGAINST THE WIRING

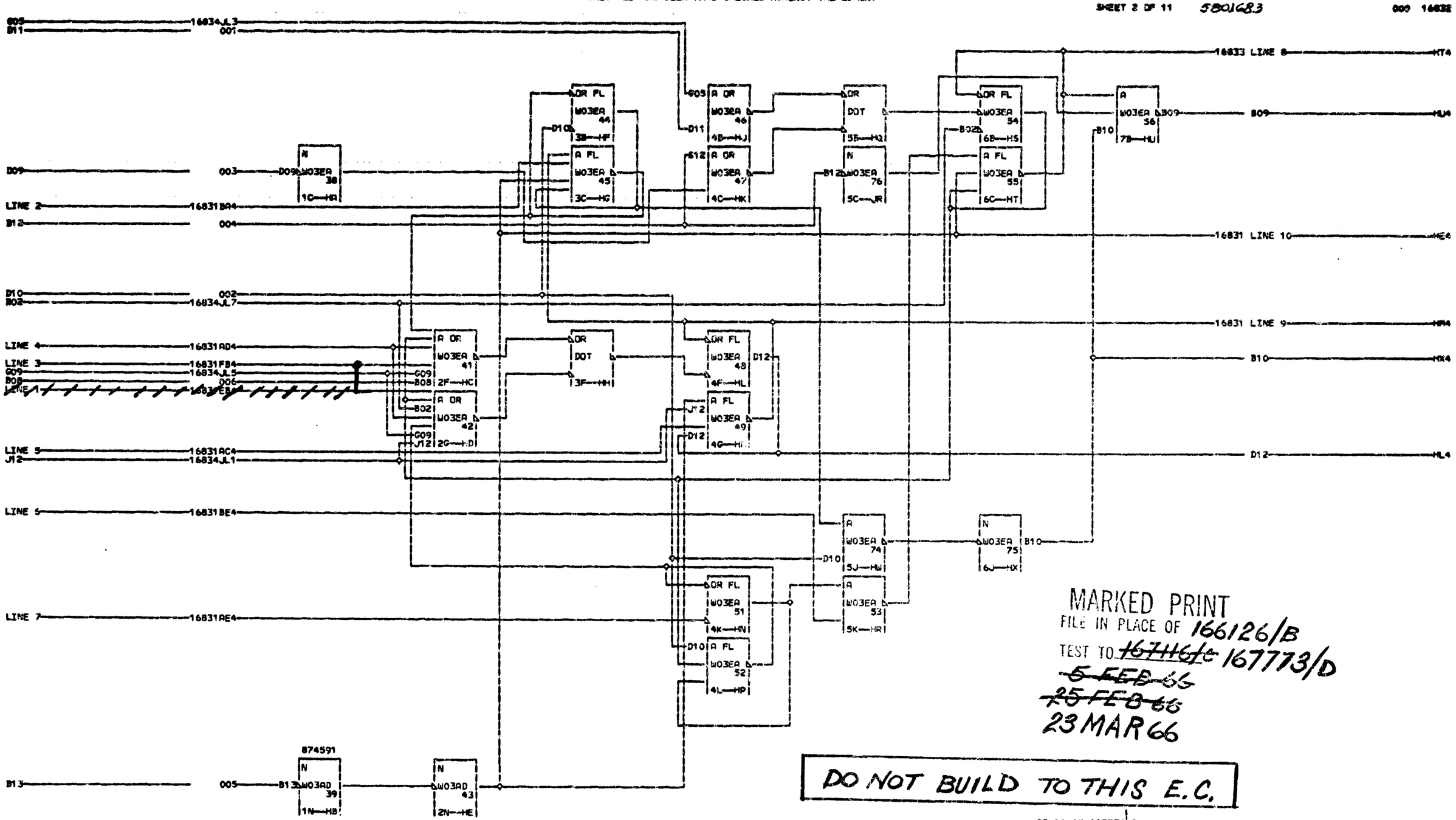

MARKED PRINT
FILE IN PLACE OF 166126/B
TEST TO ~~167116/C~~ 167773/D
~~5 FEB 66~~
~~25 FEB 66~~
23 MAR 66

DO NOT BUILD TO THIS E.C.

09-14-65 165370 A
12-22-65 166126 B
167116/C
167773/D

SIGNAL TEL INQ EOT		
DATE 00-00-00 MACH. ASSEMBLY		
LOG 131 FRAME		
CD PG 2 OF 4 P.No. 5801683		
IBM CORP. KN BLK. JS		

16832 000