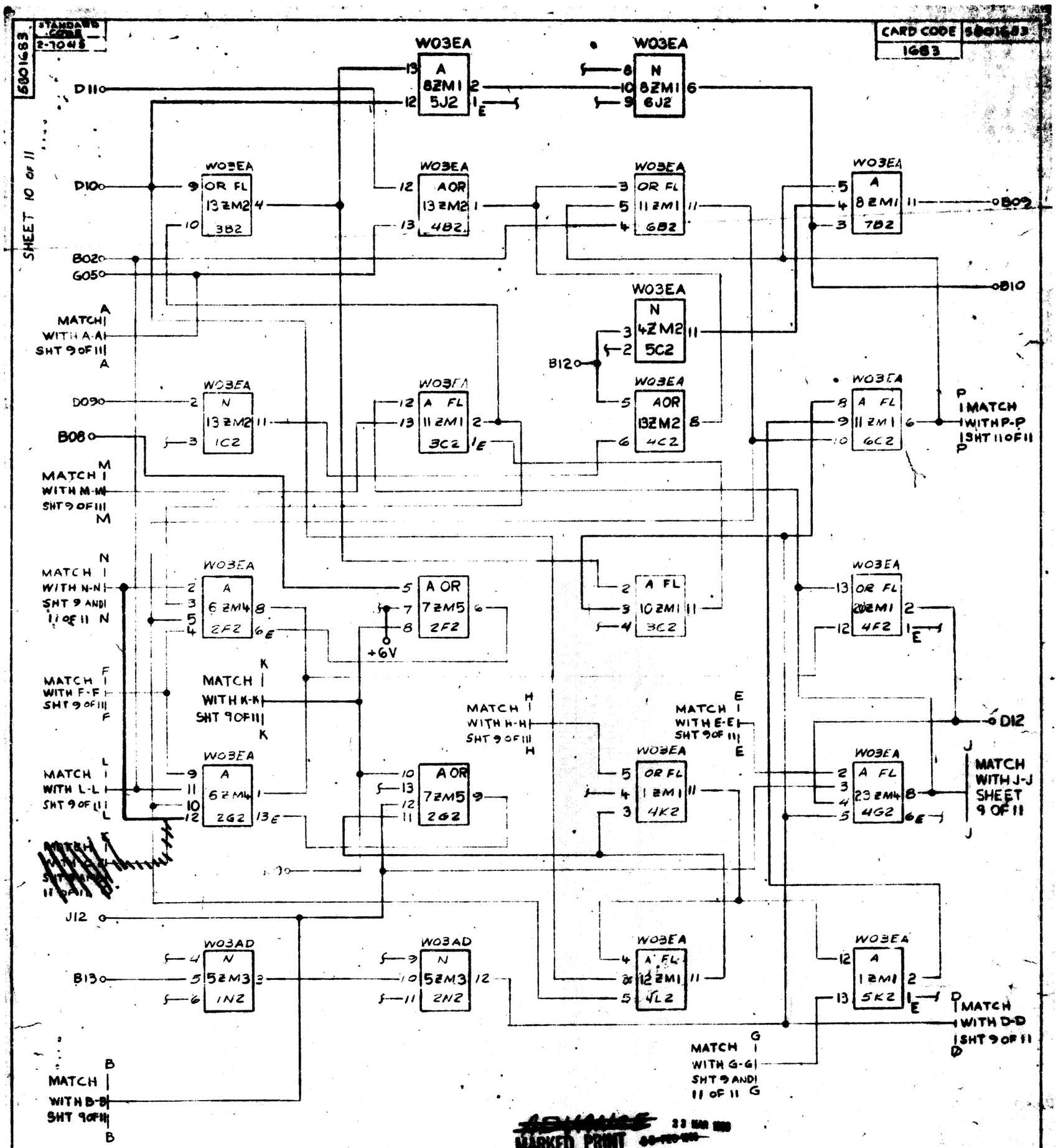
STANDARD CODE 2-70 N S
5801683
SHEET 10 OF 11
CARD CODE 5801683
1683
W03EA
W03AD
D11
D10
B02
G05
B08
D09
B13
J12
B12
B09
B10
D12
+6V
MATCH A WITH A-A SHT 9 OF 11
MATCH M WITH M-M SHT 9 OF 11
MATCH N WITH N-N SHT 9 AND 11 OF 11
MATCH F WITH F-F SHT 9 OF 11
MATCH K WITH K-K SHT 9 OF 11
MATCH L WITH L-L SHT 9 OF 11
MATCH H WITH H-H SHT 9 OF 11
MATCH E WITH E-E SHT 9 OF 11
MATCH J WITH J-J SHEET 9 OF 11
MATCH P WITH P-P SHT 11 OF 11
MATCH D WITH D-D SHT 9 OF 11
MATCH G WITH G-G SHT 9 AND 11 OF 11
MATCH B WITH B-B SHT 9 OF 11
MARKED PRINT
FILE IN PLACE OF 166126/B
TEST TO 167773/D
DO NOT BUILD TO THIS E.C.
CIRCUIT & PACKAGING STANDARD
APPROVAL DATE
NOTE: SERVICE VOLTAGES FOR MONOLITHIC MODULES ARE:
+6 PIN 7
GND PIN 14
INTERNATIONAL BUSINESS MACHINES CORP.
CARD ASM-SIGNAL TEL ING EOT
2701-SDA
DATE 9-14-65 22 DEC 66
CHANGE NO. 165370A 166126 B
167773 D
NOTE X PRINT TO ENG. SPEC. NO. 895291
DEVELOPMENT NO. 680-1169
5801683