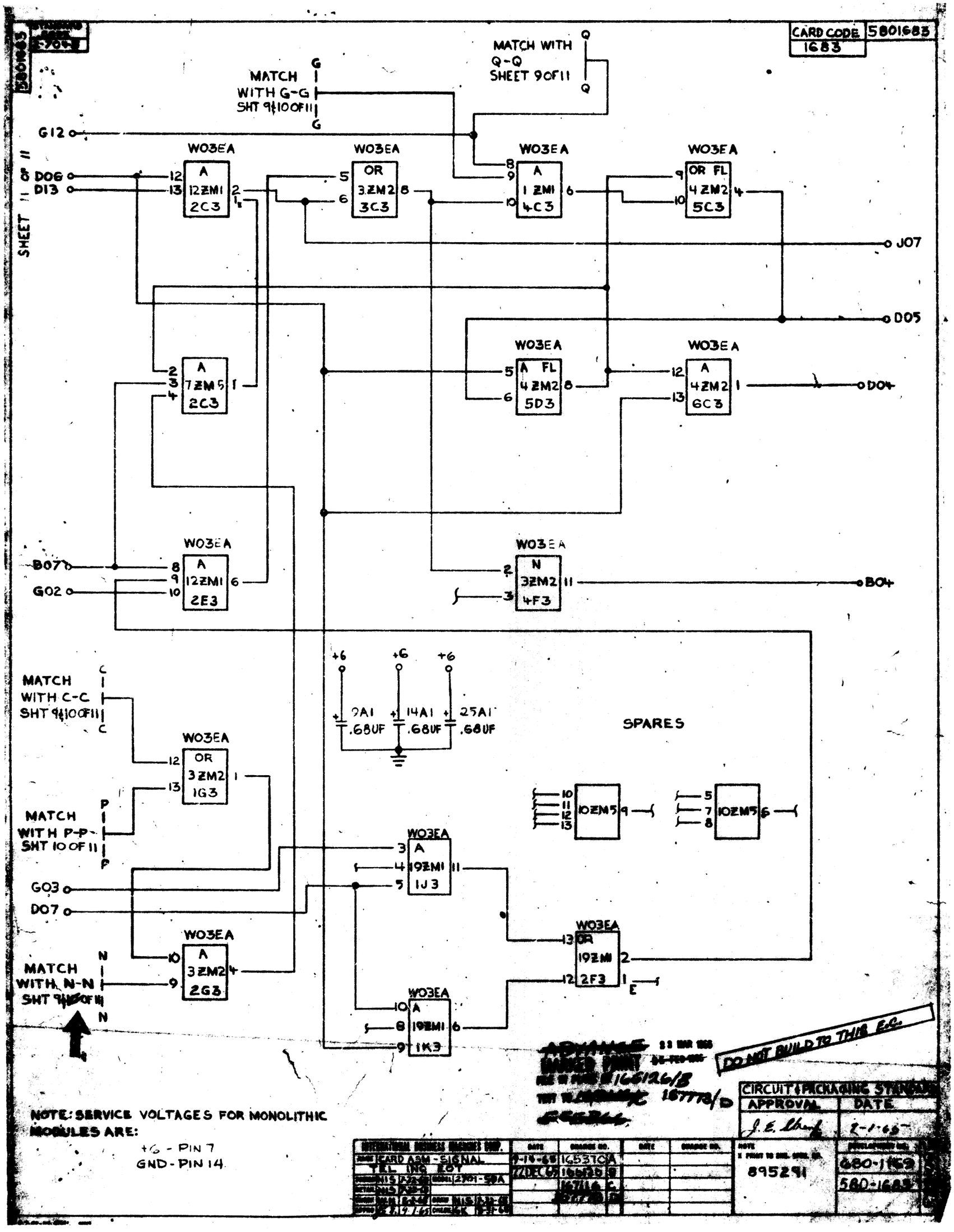
CARD CODE 1683
5801683
SHEET 11 OF 11
MATCH WITH G-G SHT 9&10 OF 11
MATCH WITH Q-Q SHEET 9 OF 11
G12
D06
D13
W03EA
A 12ZM1 2C3
OR 3ZM2 3C3
A 1ZM1 4C3
OR FL 4ZM2 5C3
J07
D05
A 7ZM5 2C3
A FL 4ZM2 5D3
A 4ZM2 6C3
D04
D07
G02
A 12ZM1 2E3
N 3ZM2 4F3
B04
+6
9A1 .68UF
14A1 .68UF
25A1 .68UF
SPARES
MATCH WITH C-C SHT 9&10 OF 11
OR 3ZM2 1G3
MATCH WITH P-P SHT 10 OF 11
10ZM5
A 19ZM1 1J3
G03
D07
A 3ZM2 2G3
MATCH WITH N-N SHT 9&10 OF 11
OR 19ZM1 2F3
A 19ZM1 1K3
DO NOT BUILD TO THIS E.C.
NOTE: SERVICE VOLTAGES FOR MONOLITHIC MODULES ARE:
+6 - PIN 7
GND - PIN 14
CIRCUIT & PACKAGING STANDARDS
APPROVAL
DATE
CARD ASM - SIGNAL TEL INC EXT
895291
680-1169
580-1683