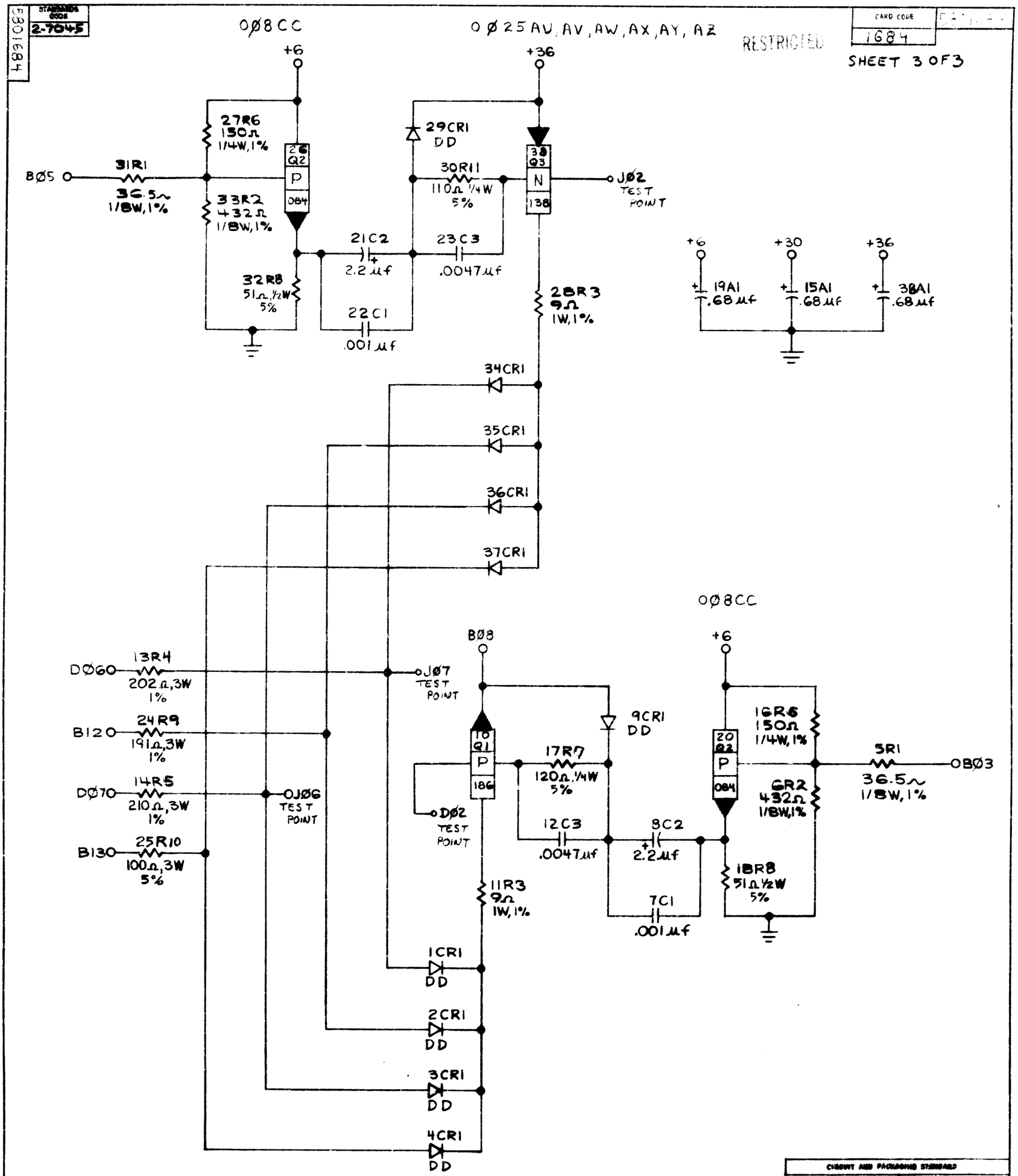

CIRCUIT AND PACKAGING STANDARDS	
APPROVAL	DATE
R. Otrubka	6-22-65

INTERNATIONAL BUSINESS MACHINES CORP.					DATE	CHANGE NO.	DATE	CHANGE NO.	NOTE	DEVELOPMENT NO.
NAME	CARD ASM- [illegible] BIT 2				6-3-65	164677 A			X PRINT TO ENG. SPEC. NO.	680-1022
DESIGN	NIS	2-17-65	MODEL	2230						
DETAIL	NIS	2-17-65								
CHECK	RJS	6-3-65	DRAW	NIS	2-17-65					
APPRO	RJS	6-22-65	CHECK	RJS	6-3-65					

1684

C. B. CO., NO. 44-811A 42846

FORM 85-6278-1