5801685 SHEET 3 OF 3

CARD CODE 5801685
1685

SHEET 3 OF 3
RESTRICTED

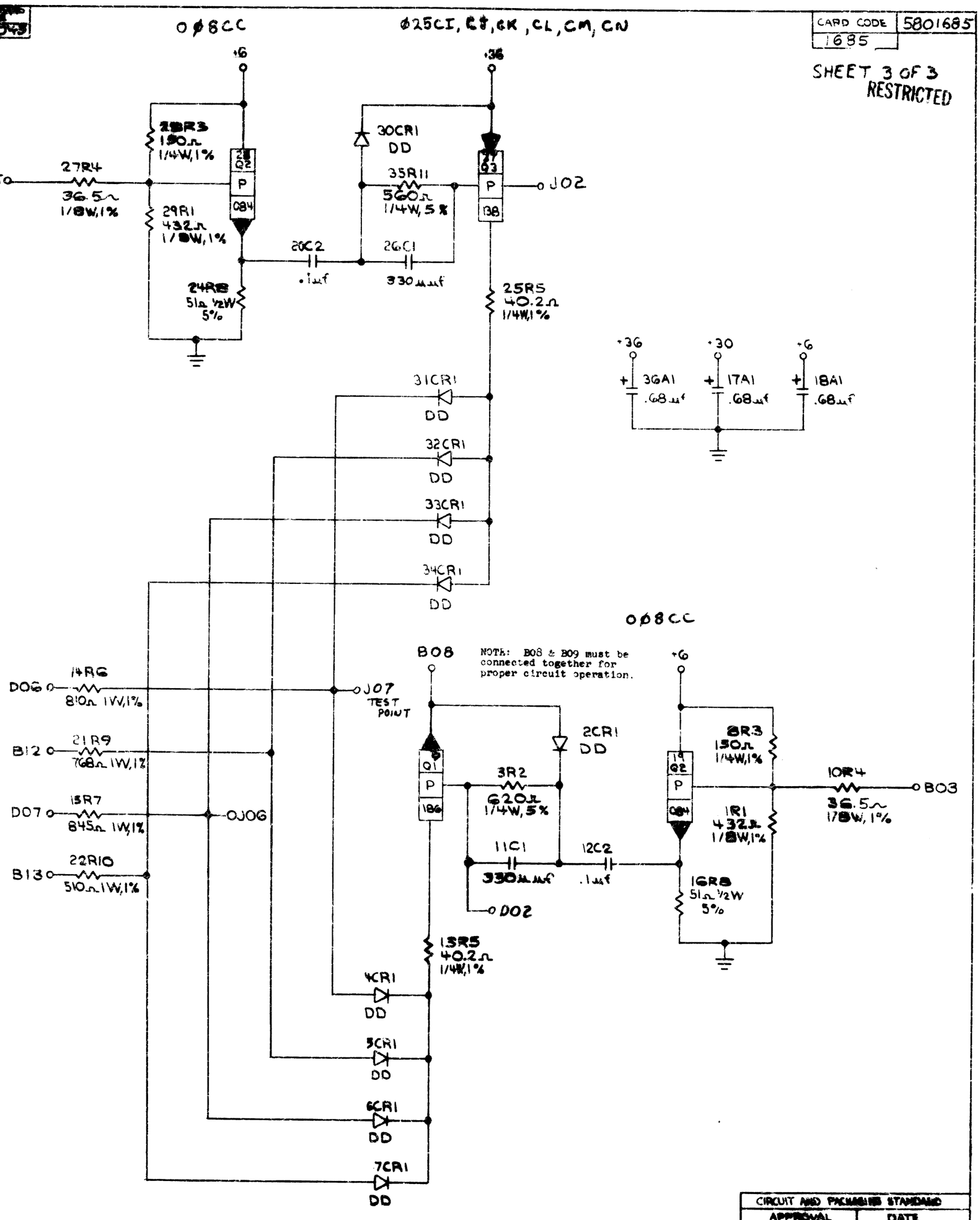


THE FOLLOWING VOLTAGE PINS ARE BUSSED:

J11 AND J12
B08 AND B09
D08 AND J08 ARE NOT BUSSED

| CIRCUIT AND PACKAGING STANDARDS | |
|---|---|
| APPROVAL | DATE |
| J. Z. Rotbard | 6-22-65 |

| INTERNATIONAL BUSINESS MACHINES CORP. | DATE | CHANGE NO. | DATE | CHANGE NO. |
|---|---|---|---|---|
| MADE [redacted] | 6-3-65 | 1646795 | | |
| DESIGN [redacted] MODEL 2250 | | 1671285 | | |
| DETAIL [redacted] | | | | |
| CHECK [redacted] DRAWN [redacted] | | | | |
| APPRO [redacted] DRAWN [redacted] | | | | |

NOTE
X PRINT TO DEV. SPEC. NO.

DEVELOPMENT NO.
680-1083

5801685

5801685