5801691

STANDARDS CODE 2-7045

CARD CODE 5801691
1691

SHEET 8 OF 9

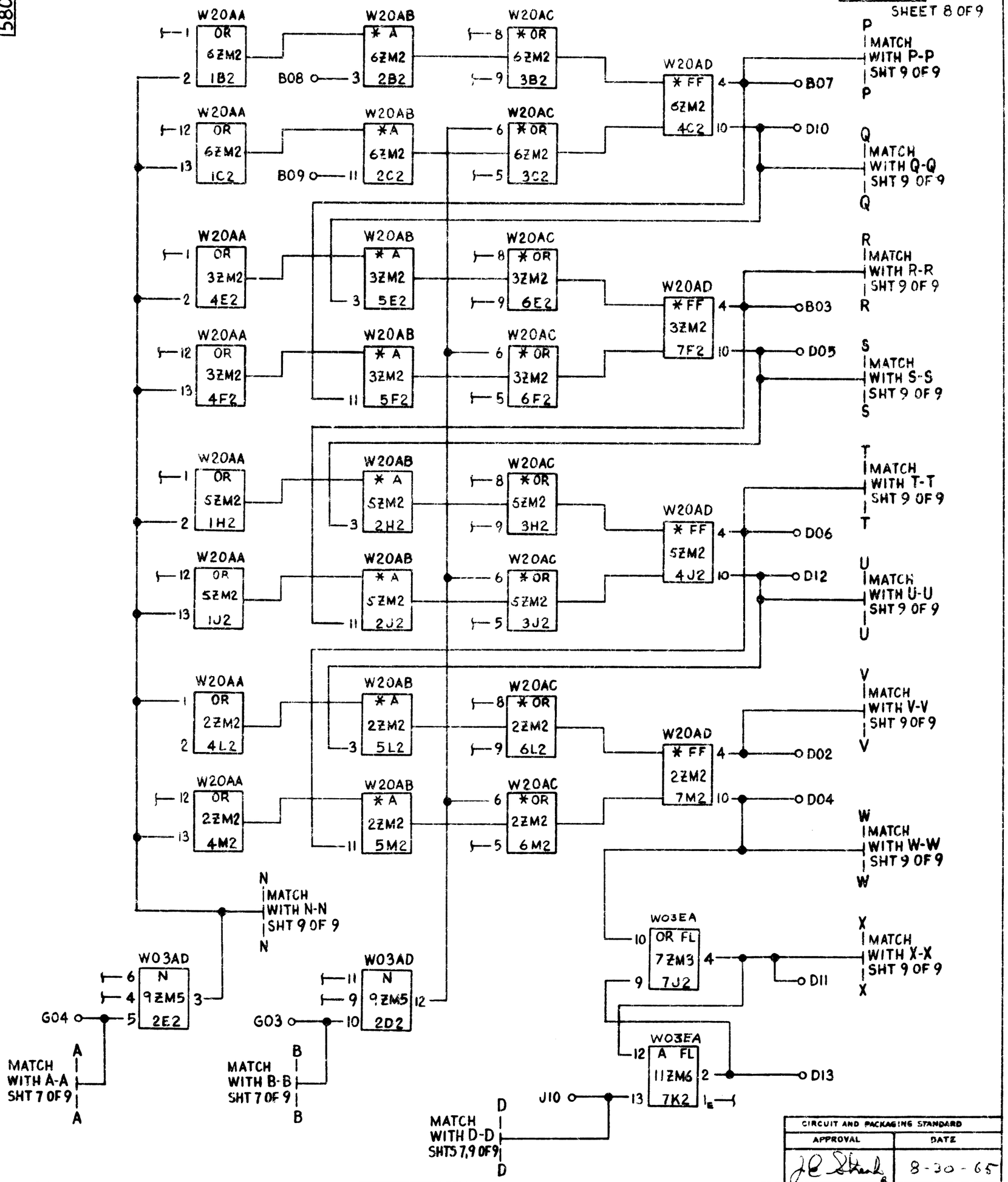

NOTE: SERVICE VOLTAGES FOR ALL MONOLITHIC MODULES ARE:
+6V - PIN 7
GND - PIN 14

CIRCUIT AND PACKAGING STANDARD	
APPROVAL	DATE
J.R. Stark	8-30-65

INTERNATIONAL BUSINESS MACHINES CORP.																			
NAME	CARD ASM- RING COUNTER AND CHECKING																		
DESIGN	EJS	7-14-65	MODEL	2701-[illegible]															
DETAIL	EJS	7-14-65																	
CHECK	RJ	7-22-65	DRAW	EJS	7-15-65														
APPRO	[illegible]	8-25-65	CHECK	[illegible]	7-21-65														

DATE	CHANGE NO.	DATE	CHANGE NO.
9-22-65	165655=A		

NOTE
X PRINT TO ENG. SPEC. NO.
895291

DEVELOPMENT NO.
680-1171

5801691

5801691

C. B. CO., NO. 44-511A 42849

FORM 84-8270-1