5801692

STANDARD CODE 2-7045

CARD CODE 5801692

1692

SHEET 3 OF 4

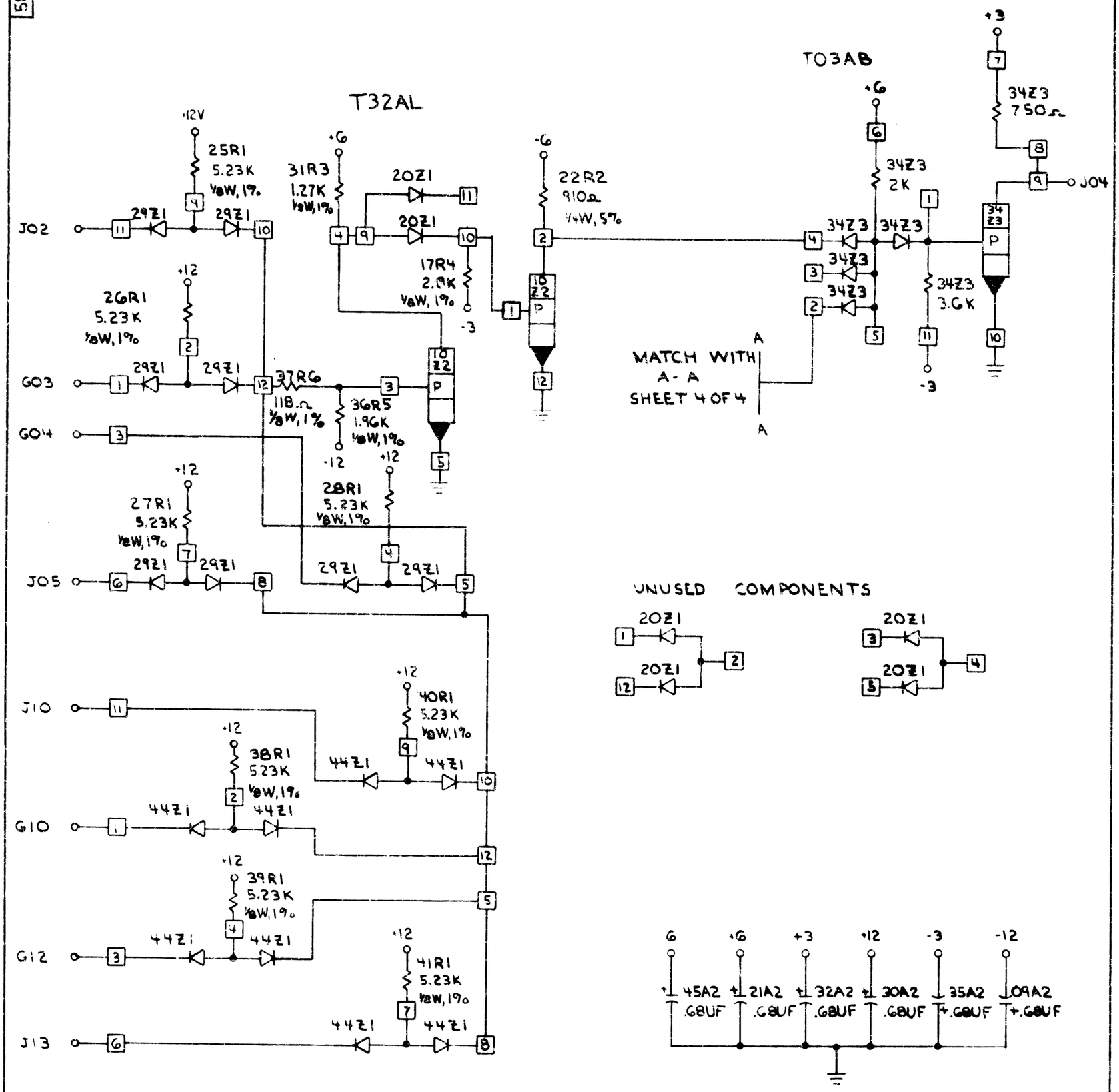

NOTE:
THE VOLTAGE PINS D08-J08, B11-G11 ARE NOT BUSSED

RESTRICTED

CIRCUIT PACKAGING SYSTEMS	
APPROVAL	DATE
J.E. [illegible]	9-1-65

INTERNATIONAL BUSINESS MACHINES CORP.				DATE	CHANGE NO.		DATE	CHANGE NO.	NOTE	DEVELOPMENT NO.	
NAME	CARD ASM-FOUR OF EIGHT CHECK MAJORITY LOGIC			9-15-65	164685	A			X PRINT TO ENG. SPEC. NO.		5801692
DESIGN	NIS 6-28-65	MODEL	2701-6DA	28JAN66	167113	B				5801692	
DETAIL	NIS 6-28-65										
CHECK	W.M 7-20-65	DRAW	NIS 6-28-65								
APPRO	[illegible] 9-1-65	CHECK									

C.B CO., NO 66-811A