5801694

STANDARDS CODE 2-7045

CARD CODE 1694 — 5801694

SHEET 7 OF 8

SHEET 7 OF 8

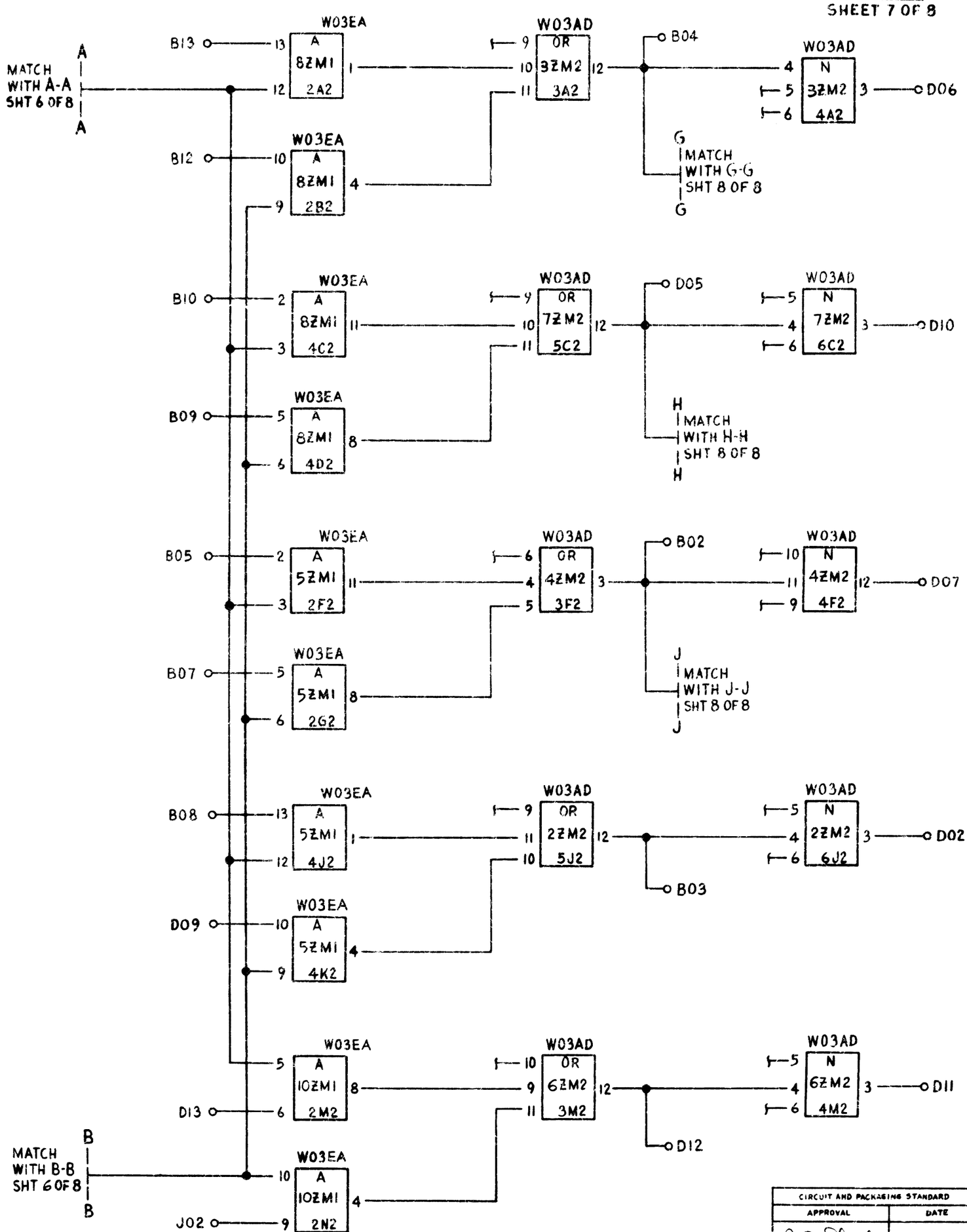


NOTE: SERVICE VOLTAGES FOR ALL MONOLITHIC MODULES ARE:
+6V - PIN 7
GND - PIN 14

| CIRCUIT AND PACKAGING STANDARD | |
|---|---|
| APPROVAL | DATE |
| J E Stirk | 7-19-65 |

| INTERNATIONAL BUSINESS MACHINES CORP. | | | | | | DATE | CHANGE NO. | DATE | CHANGE NO. |
|---|---|---|---|---|---|---|---|---|---|
| NAME | CARD ASM - BUFFER INPUT GATING REC DATA OR BUS OUT | | | | | 9-9-65 | 165347-A | | |
| DESIGN | EJS | 6-10-65 | MODEL | 270-50A | | | | | |
| DETAIL | EJS | 6-10-65 | | | | | | | |
| CHECK | RJ | 7-11-65 | DRAW | EJS | 6-15-65 | | | | |
| APPRO | DES | 7-15-65 | CHECK | RJ | 7-12-65 | | | | |

NOTE
X PRINT TO ENG. SPEC. NO.
895291

DEVELOPMENT NO.
680-1174

5801694

5801694

C. B. CO. NO 44511A 42840