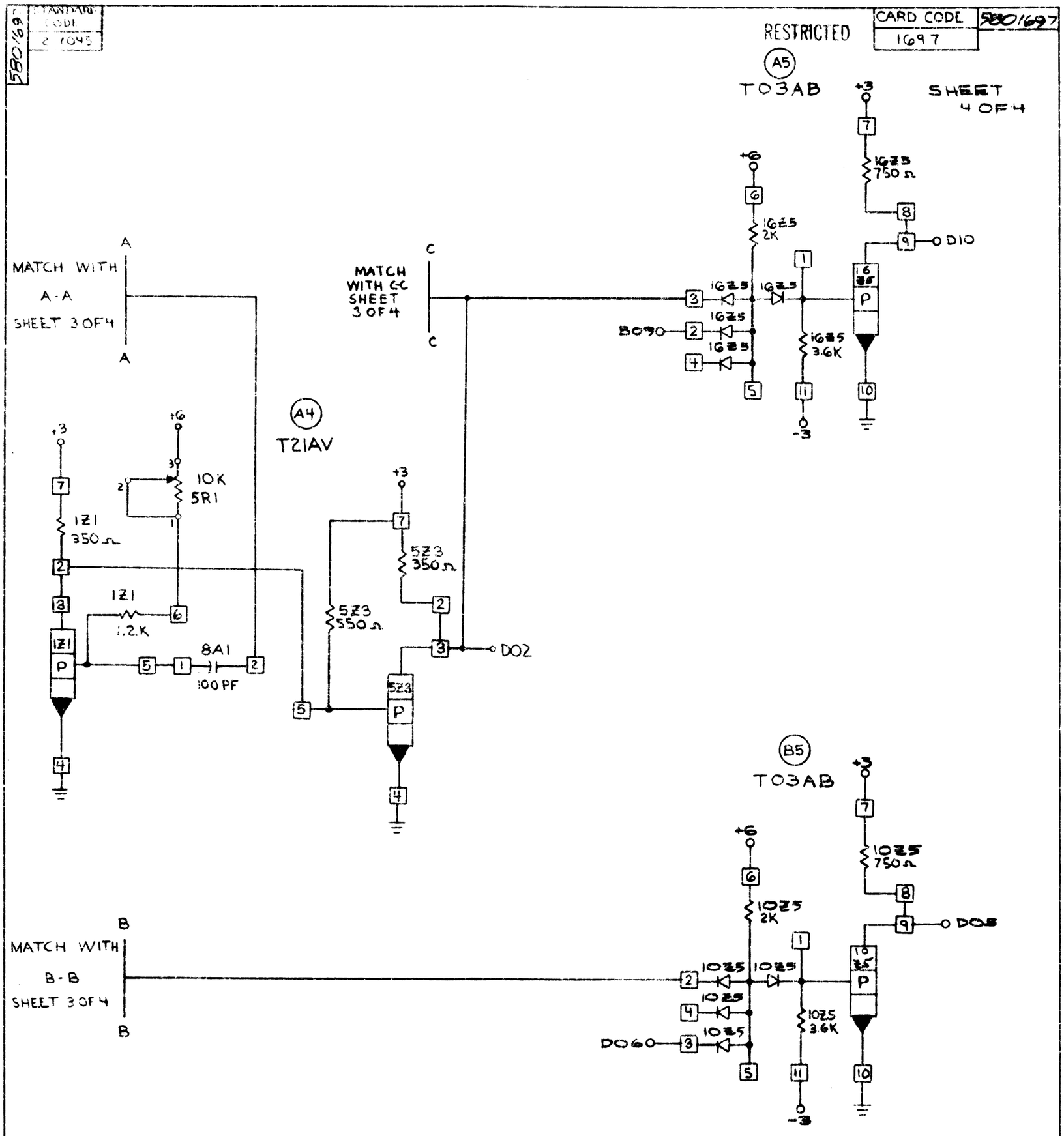
STANDARD CODE 2 7045
5801697
CARD CODE 1697
RESTRICTED
A5
T03AB
SHEET 4 OF 4
+3
7
16Z5 750Ω
+6
6
16Z5 2K
8
9
D10
MATCH WITH A-A SHEET 3 OF 4
A
A
MATCH WITH C-C SHEET 3 OF 4
C
C
3
16Z5
16Z5
B090
2
16Z5
4
16Z5
1
16Z5 3.6K
5
11
-3
10
A4
T21AV
+3
7
10K 5R1
2
3
1
1Z1 350Ω
2
3
1Z1
1.2K
6
1Z1
P
5
1
8A1
2
100 PF
4
+6
+3
7
5Z3 350Ω
5Z3 550Ω
2
3
D02
5Z3
P
5
4
B5
T03AB
+3
7
10Z5 750Ω
+6
6
10Z5 2K
8
9
D05
MATCH WITH B-B SHEET 3 OF 4
B
B
2
10Z5
10Z5
1
10Z5
P
4
10Z5
D060
3
10Z5
10Z5 3.6K
5
11
10
-3
CIRCUIT & PACKAGING STANDARD
APPROVAL
DATE
JE Stenk
7-8-65
INTERNATIONAL BUSINESS MACHINES CORP.
NAME CARD ASM 1351-47 NS TO 300NS
SS 2254 TNS TO 120 USEC
DESIGN NIS 6-22-65
MODEL 2250-1
DETAIL NIS 6-22-65
CHECK WN 7-7-65
DRAW NIS 6-22-65
APPRO JES 7-8-65
CHECK
DATE
CHANGE NO.
7-21-65 164659 A
2DEC66 168984 B
DATE
CHANGE NO.
NOTE
X PRINT TO ENG. SPEC. NO.
DEVELOPMENT NO.
5801697
5801697