5801698

CARD CODE 1698

SHEET 6 OF 6

RESTRICTED

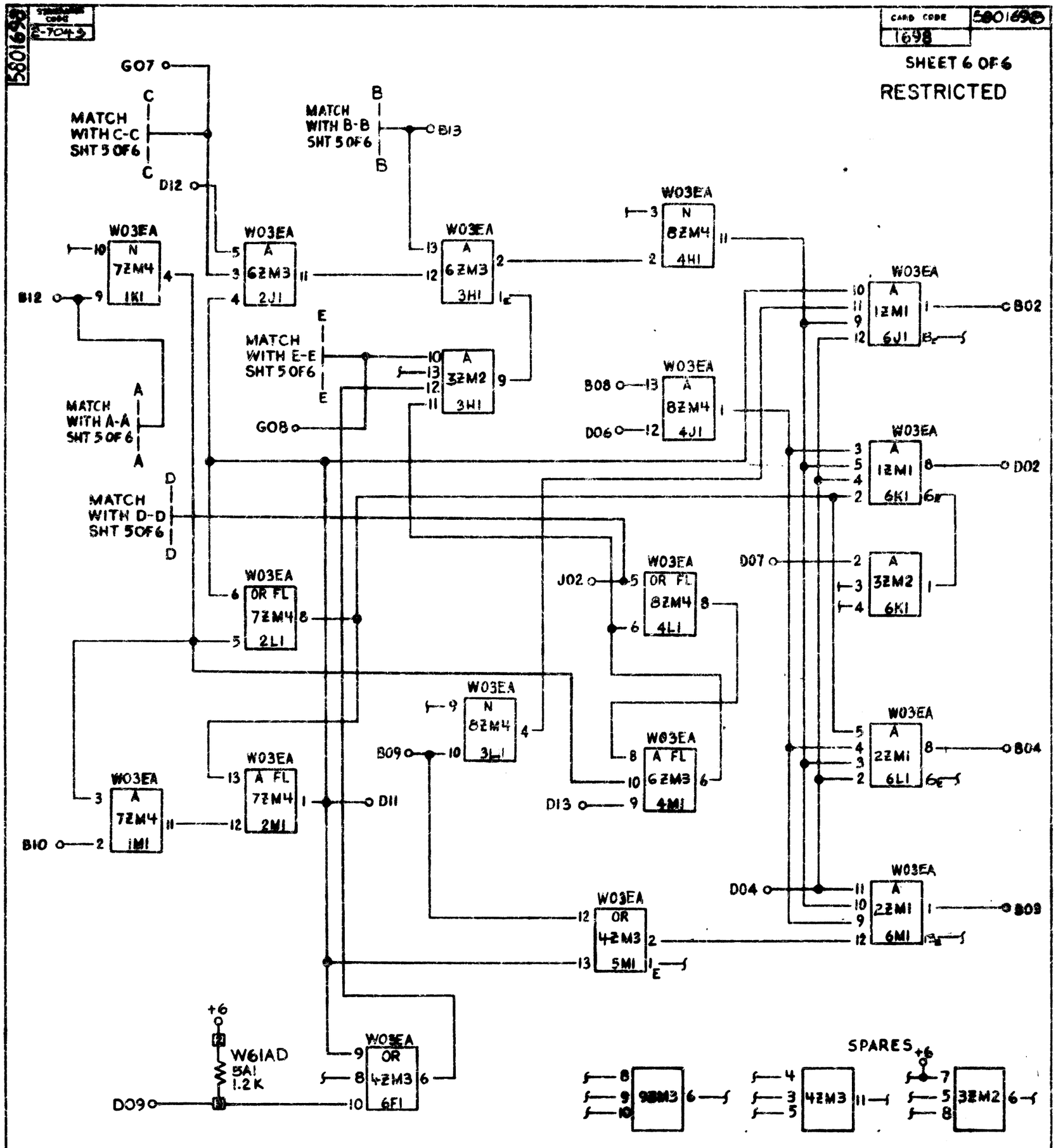

NOTE: SERVICE VOLTAGES FOR MONOLITHIC MODULES ARE:
+6V-PIN 7
GND-PIN 14

DATE	CHANGE NO.	DATE	CHANGE NO.

NOTE: X PRINT TO SHL. SPEC. NO. 895291

DEVELOPMENT NO. 680-1195

5801698