FORM 2-7045-6 (8-63)

STANDARDS CODE	CIRCUIT AND PACKAGING STANDARD		SYM	DATE	CHANGE NO.	TECH APPRO	SYM	DATE	CHANGE NO.	TECH APPRO	DEVELOPMENT NO	Q/M
2-7045				9-21-65	DV5345-1							
CARD CODE	APPROVAL	DATE										
1705	GHM	8-5-65									5801705	

SHEET 4 OF 9

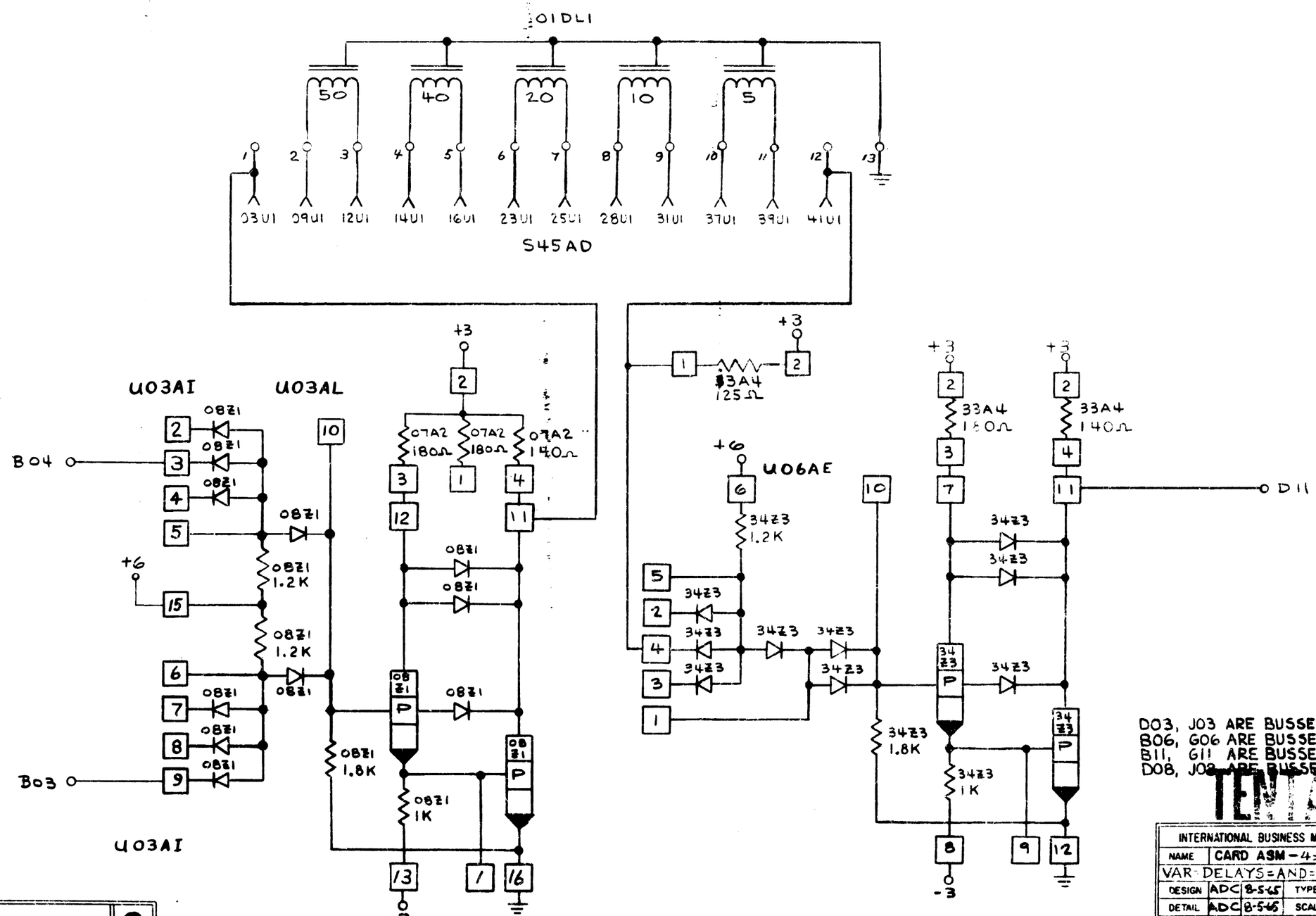

INTERNATIONAL BUSINESS MACHINES CORP				
NAME	CARD ASM-4=5-125=NS=			
VAR-DELAYS=AND=4=3-WAY=AI				
DESIGN	ADC	8-5-65	TYPE	604
DETAIL	ADC	8-5-65	SCALE	NONE
CHECK	ADC	8-11-65	DRAW	
APPRO	GHM	8-5-65	CHECK	

50L10BS C