FORM 2-7045-6 (9-63)

STANDARDS CODE	CIRCUIT AND PACKAGING STANDARD		SYM	DATE	CHANGE NO.	TECH APPRO	SYM	DATE	CHANGE NO.	TECH APPRO	DEVELOPMENT NO.	Q/M
2-7045				9-21-65	M5563-A							
CARD CODE	APPROVAL	DATE										
1707	GHM	8-14-65									5801707	

SHEET 4 OF 10

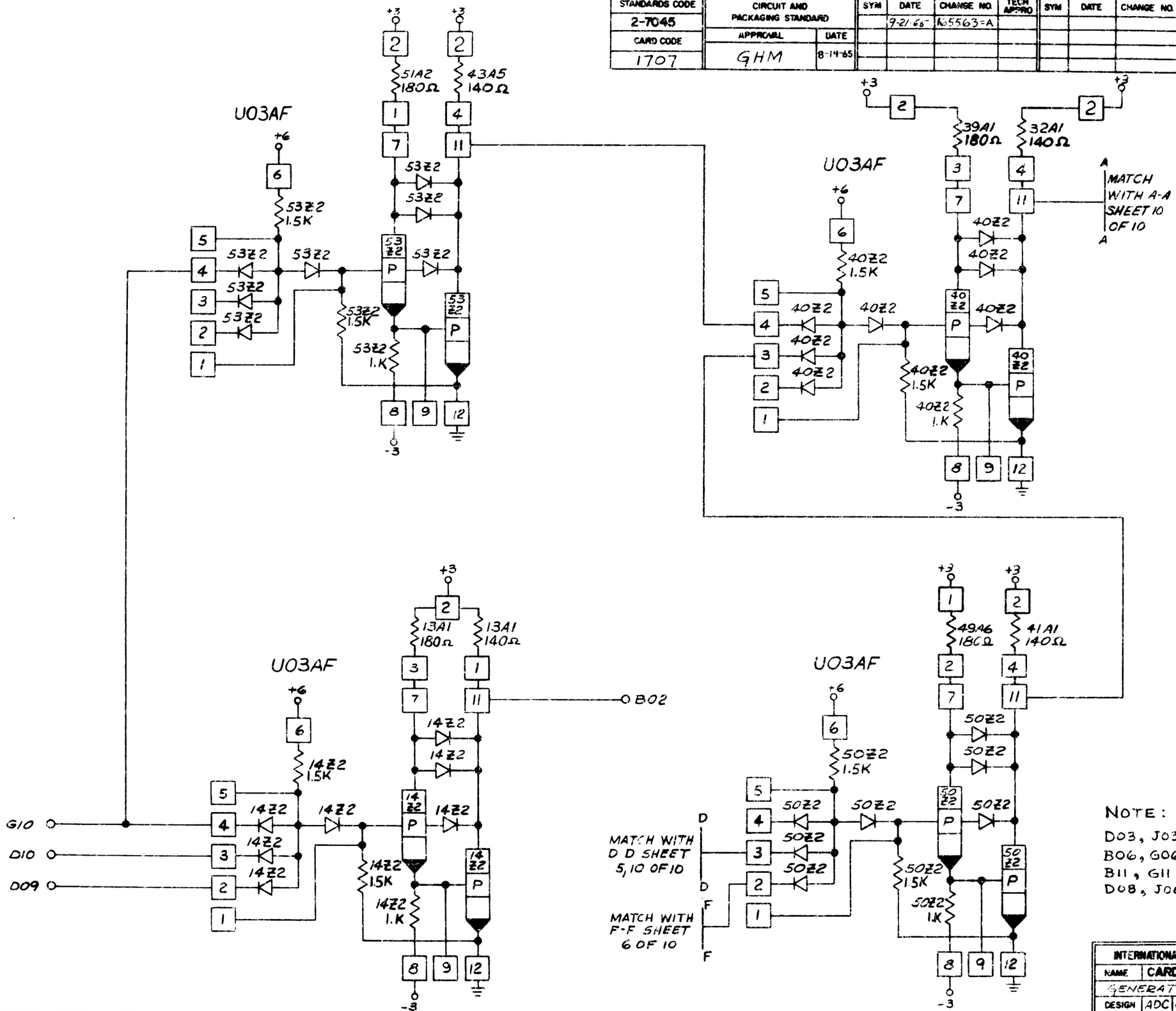

NOTE:

D03, J03 ARE BUSSED
B06, G06 ARE BUSSED
B11, G11 ARE BUSSED
D08, J08 ARE BUSSED

INTERNATIONAL BUSINESS MACHINES CORP				
NAME	CARD ASM - D09			
GENERATION				
DESIGN	ADC	8-14-65	TYPE	5015
DETAIL	ADC	8-14-65	SCALE	NONE
CHECK	ADC	8-25-65	DRAW	
APPRO	GHM	8-14-65	CHECK	

5801707 C