FORM 2-7045-6 (8-63)

STANDARDS CODE	CIRCUIT AND PACKAGING STANDARD		SYM	DATE	CHANGE NO.	TECH APPRO	SYM	DATE	CHANGE NO.	TECH APPRO	DEVELOPMENT NO	Q/M
2-7045				9-21-65	165563-A							
CARD CODE	APPROVAL	DATE										
1707	GHM	8-14-65									5801707	

SHEET 1 OF 10

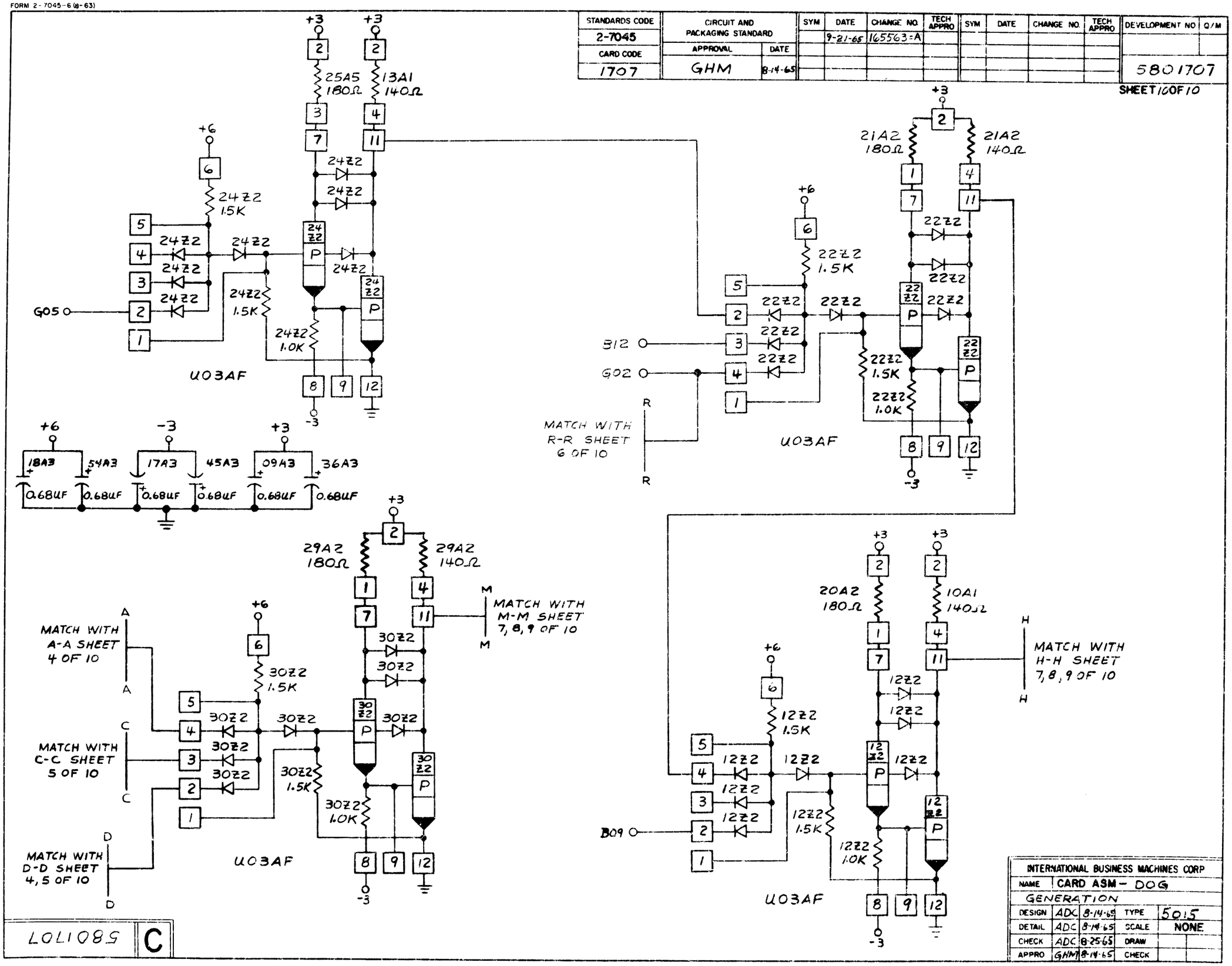

INTERNATIONAL BUSINESS MACHINES CORP					
NAME	CARD ASM - DOG				
GENERATION					
DESIGN	ADC	8-14-65	TYPE	5015	
DETAIL	ADC	8-14-65	SCALE	NONE	
CHECK	ADC	8-25-65	DRAW		
APPRO	GHM	8-14-65	CHECK		

L01089 C