FORM 2-7043-6 (6-63)

STANDARDS CODE	CIRCUIT AND PACKAGING STANDARD		SYM	DATE	CHANGE NO.	TECH APPRO	SYM	DATE	CHANGE NO.	TECH APPRO	DEVELOPMENT NO.	G/M
2-6240					167708 A							
CARD CODE	APPROVAL	DATE		10CT68	175397 B						5801708	
1708	GHM	6/3/66										

SHEET 4 OF 6

RESTRICTED

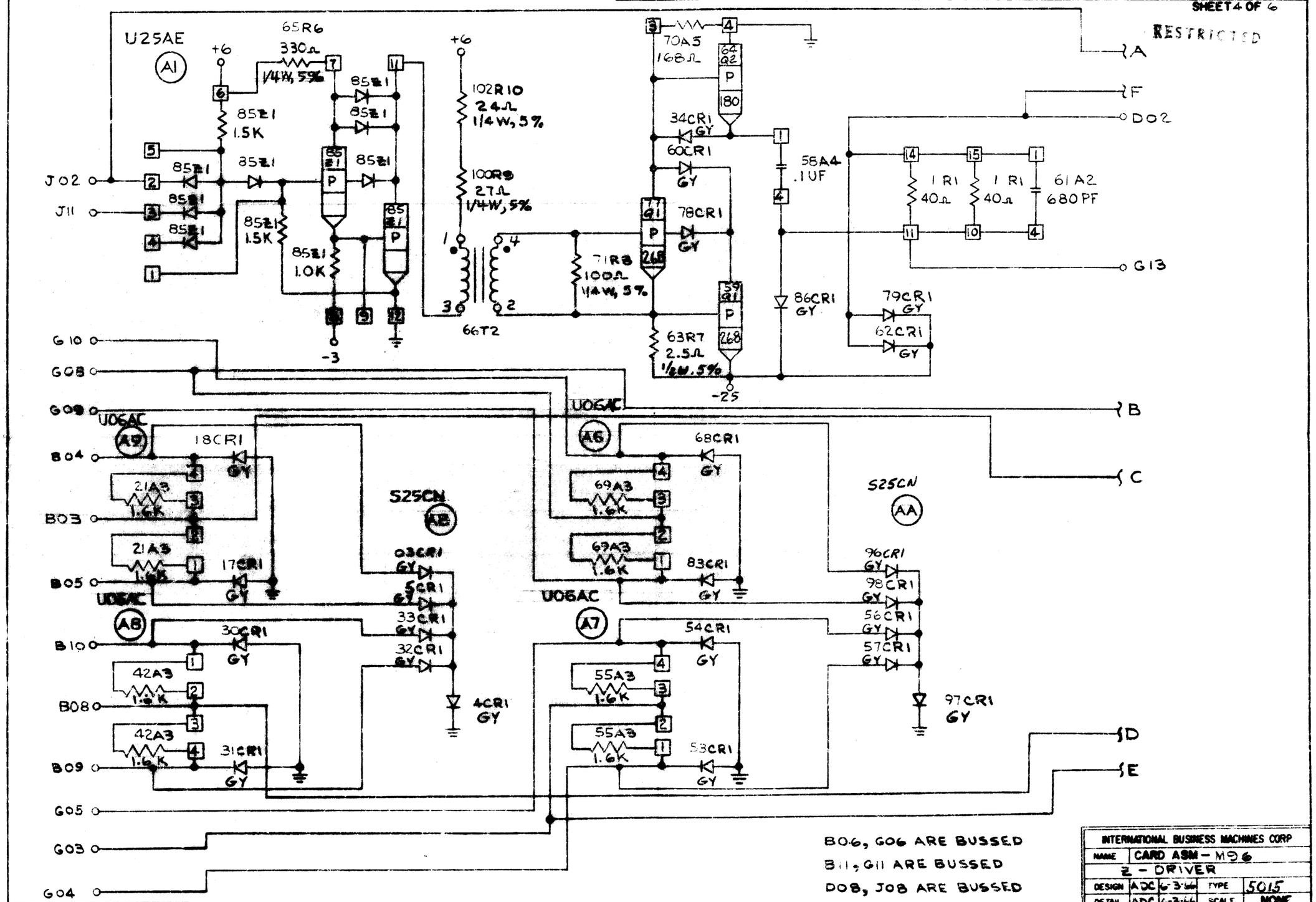

B06, G06 ARE BUSSED
B11, G11 ARE BUSSED
D08, J08 ARE BUSSED

INTERNATIONAL BUSINESS MACHINES CORP				
NAME	CARD ASM - M96			
	Z - DRIVER			
DESIGN	ADC	6-3-66	TYPE	5015
DETAIL	ADC	6-3-66	SCALE	NONE
CHECK	ADC	6-6-66	DRAW	
APPRO	GHM	6-3-66	CHECK	F.L.P 6-7-66

5801708 C