FORM 2-7048-8 (9-63)

STANDARDS CODE	CIRCUIT AND PACKAGING STANDARD		SYM	DATE	CHANGE NO.	TECH APPRO	SYM	DATE	CHANGE NO.	TECH APPRO	DEVELOPMENT NO.	Q/M
2-6240					67708 A							
CARD CODE	APPROVAL	DATE		10CT68	175397 B							
1708	GHM	6/3/66									5801708	

SHEET 5 OF 6

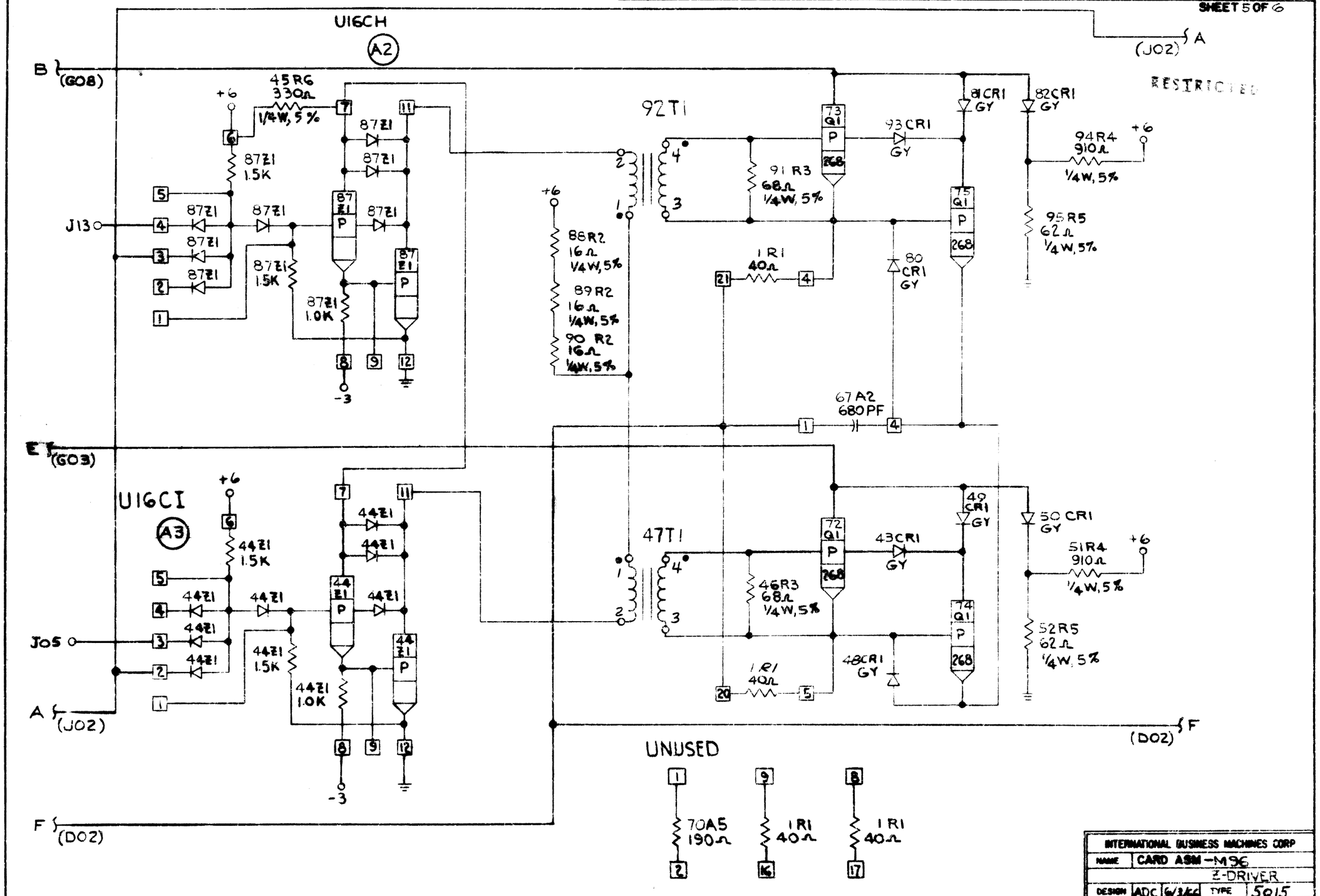

INTERNATIONAL BUSINESS MACHINES CORP				
NAME	CARD ASM-M96 Z-DRIVER			
DESIGN	ADC	6/3/66	TYPE	5015
DETAIL	ADC	6/3/66	SCALE	NONE
CHECK	ADC	6/6/66	DRAW	
APPRO	GHM	6/3/66	CHECK	FLP 6-7-66

5801708 C