STANDARDS CODE	CIRCUIT AND PACKAGING STANDARD		SYM	DATE	CHANGE NO.		SYM	DATE	CHANGE NO.		DEVELOPMENT NO.	G/M
2-7046				11-2-65	DV54621							
CARD CODE	APPROVAL	DATE										
1709	GHM	10-1-65									5801709	

SHEET 4 OF 11

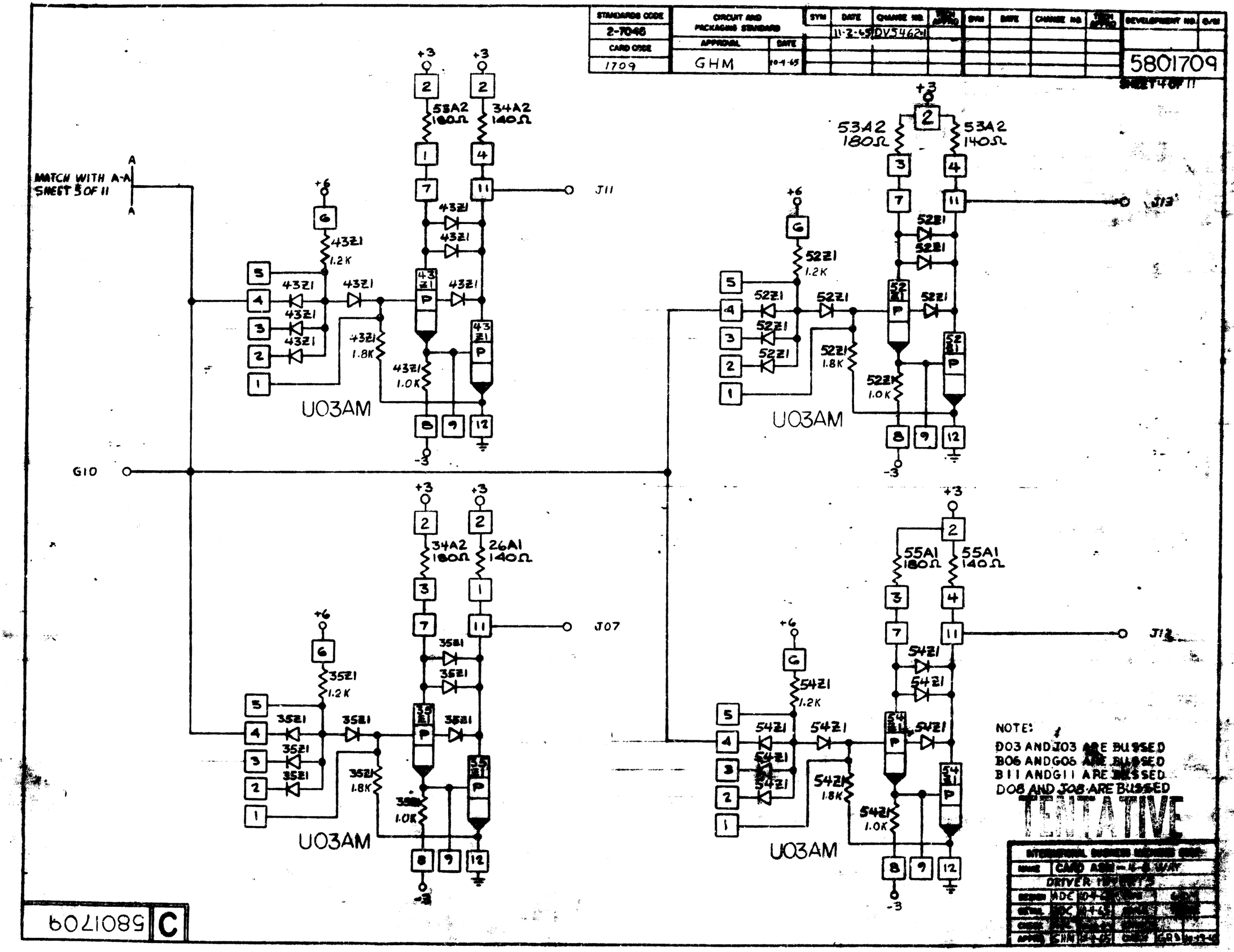

C 5801709