STANDARDS CODE	CIRCUIT AND PACKAGING STANDARD		SYM	DATE	CHANGE NO	TECH APPRO	SYM	DATE	CHANGE NO	TECH APPRO	DEVELOPMENT NO	G/M
2-7045				11-2-65	DV5462-1							
CARD CODE	APPROVAL	DATE										
1709	GHM	10-4-65									5801709	

SHEET 7 OF 11

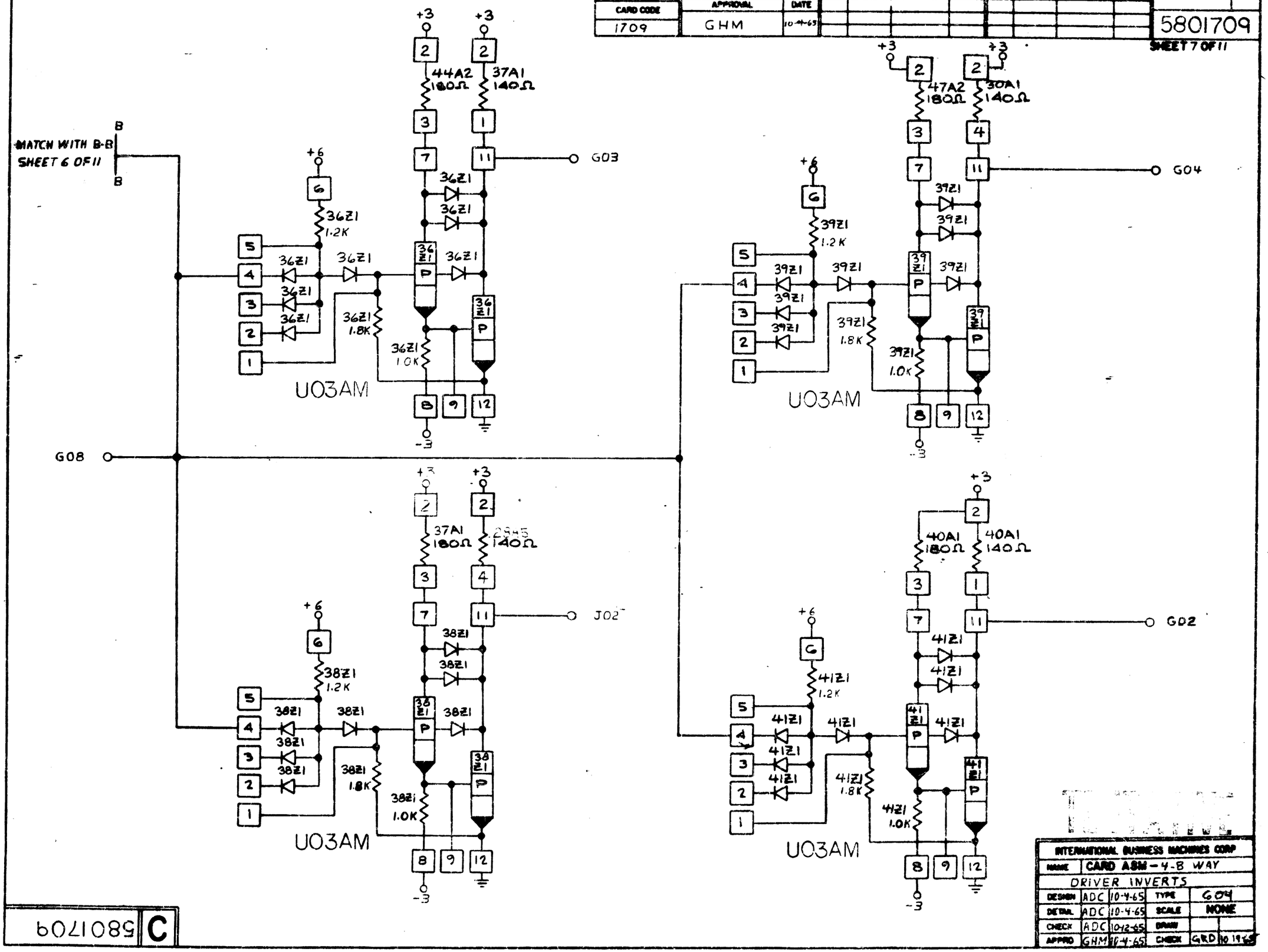

INTERNATIONAL BUSINESS MACHINES CORP				
NAME	CARD ASM - 4-8 WAY			
DRIVER INVERTS				
DESIGN	ADC	10-4-65	TYPE	604
DETAIL	ADC	10-4-65	SCALE	NONE
CHECK	ADC	10-12-65	DRAW	
APPRO	GHM	10-4-65	CHECK	GRD 10 19 65

C 5801709