5801713

STANDARDS CODE 2-7045

CARD CODE 5801713

SHEET 4 OF 9

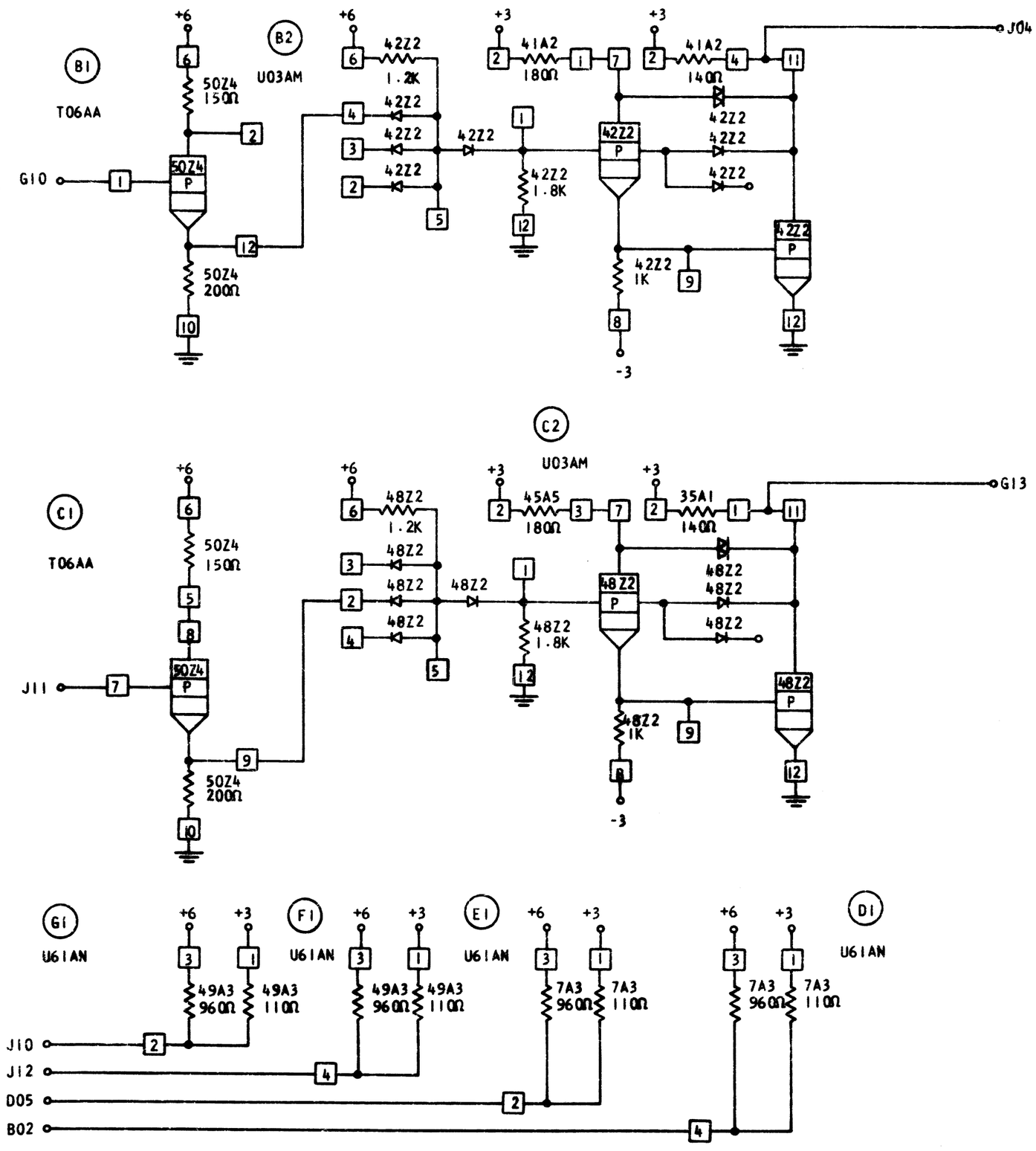

NOTES: +3 - J03, D03 BUSSED
-3 - B06, G06 BUSSED
GND - D08, J08 BUSSED
+6 - G11, B11 BUSSED

CIRCUIT AND PACKAGING STANDARD	
APPROVAL	DATE

[redacted]

NAME	MULTIPLIER GROUP CARTING		
DESIGN			MODEL
DETAIL	ROK	5JUL67	SCALE
CHECK	RPS	5JUL67	DRAW LIG 5JUL67
APPRO			CHECK

DATE	CHANGE NO.	APPROVAL	DATE	CHANGE NO.	APPROVAL	DEVELOPMENT NO.
28Aug67	171915	A				
2NOV67	172795	B				

5801713

C

DGILVIE PRESS INC BROOKLYN 17 N Y STOCK NO 6507