STANDARDS CODE 2-7045

5801713

CARD CODE 5801713

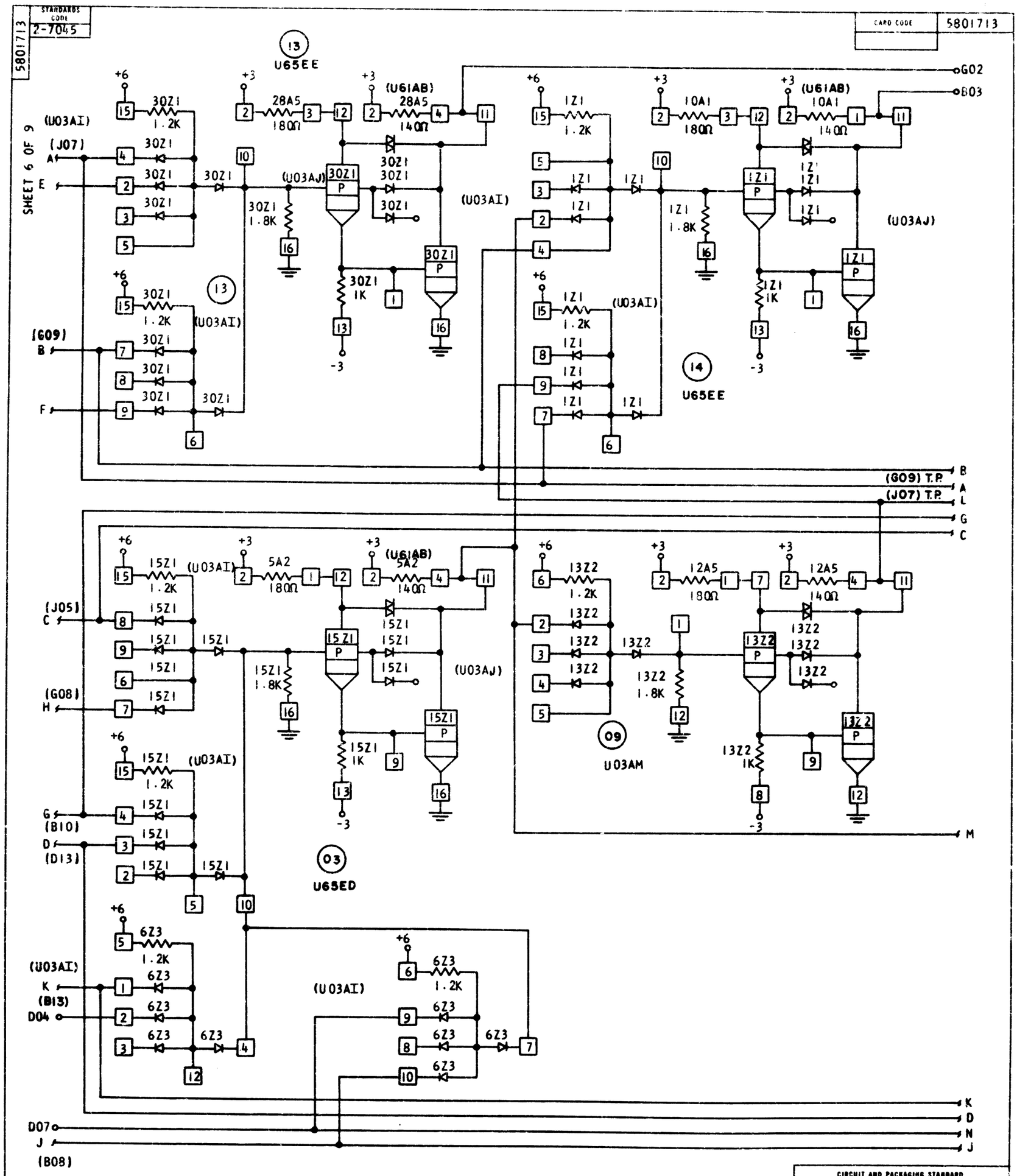

CIRCUIT AND PACKAGING STANDARD	
APPROVAL	DATE

NAME	MULTIPLIER GROUP GATING					DATE	CHANGE NO.		APPROVAL	DATE	CHANGE NO.	APPROVAL	DEVELOPMENT NO.
						28 Aug 67	171915	A					5801713
						2 NOV 67	172765	B					
DESIGN			MODEL										
DETAIL	RGK	5JUL67	SCALE										
CHECK	RPS	5JUL67	DRAW	LIG	19JUL67								
APPRO			CHECK										

C

OGILVIE PRESS INC. BROOKLYN 17 N Y STOCK NO 6937