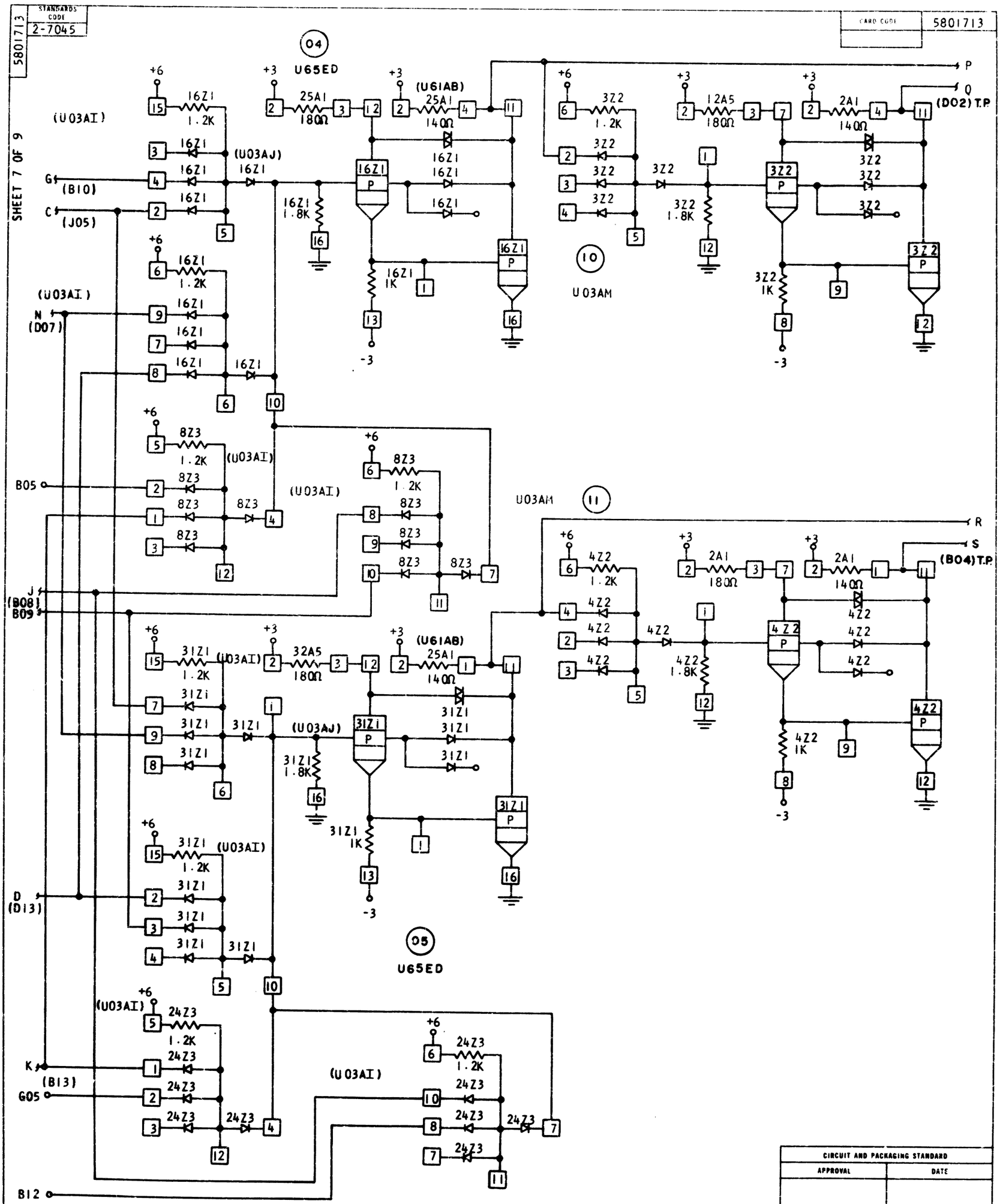
STANDARDS CODE 2-7045
5801713
CARD CODE 5801713
SHEET 7 OF 9
04
U65ED
(U03AI)
(U03AJ)
(U61AB)
(B10)
(J05)
(D07)
B05
(B08)
B09
(D13)
(B13)
G05
B12
(D02) T.P.
(B04) T.P.
U03AM
10
11
05
U65ED
CIRCUIT AND PACKAGING STANDARD
APPROVAL
DATE
INTERNATIONAL BUSINESS MACHINES CORP.
NAME MULTIPLIER GROUP GATING
DESIGN
DETAIL RGK 5JUL67
CHECK RPS 5JUL67
APPRO
MODEL
SCALE
DRAW LIG 19JUL67
CHECK
DATE
CHANGE NO.
APPROVAL
DEVELOPMENT NO.
28 AUG 67 171915 A
2NOV67 172765 B
5801713
C