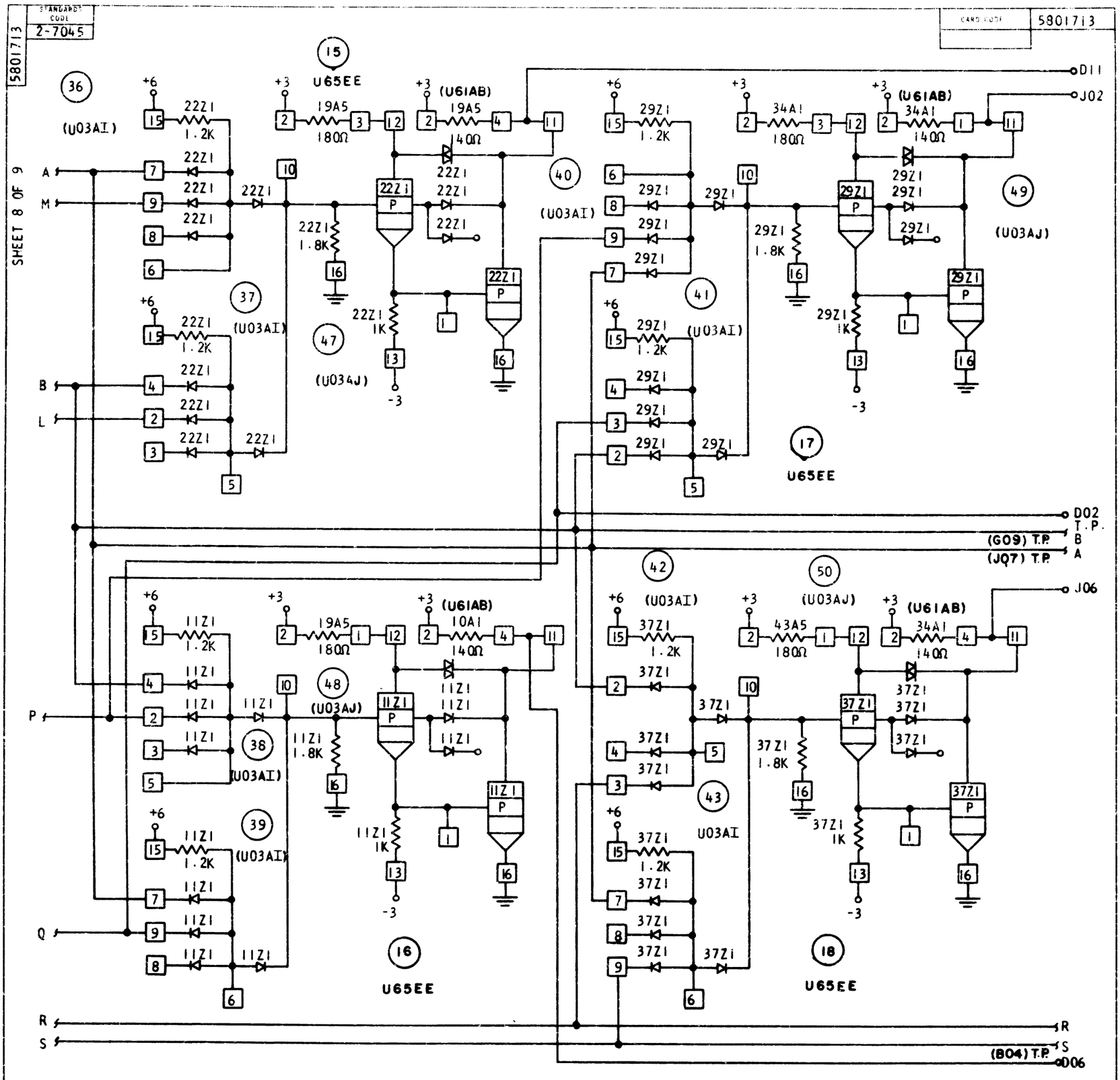

CIRCUIT AND PACKAGING STANDARD	
APPROVAL	DATE

INTERNATIONAL BUSINESS MACHINES CORP.

NAME	MULTIPLIER GROUP GATING				
DESIGN			MODEL		
DETAIL	RGK	5JUL67	SCALE		
CHECK	RPS	5JUL67	DRAW	LIG	19JUL67
APPRO			CHECK		

DATE	CHANGE NO.		APPROVAL	DATE	CHANGE NO.	APPROVAL	DEVELOPMENT NO.
28Aug67	171915	A					
2NOV67	172765	B					

5801713

C

©SILVIE PRESS INC. BROOKLYN 17 N.Y. STOCK NO. 6907