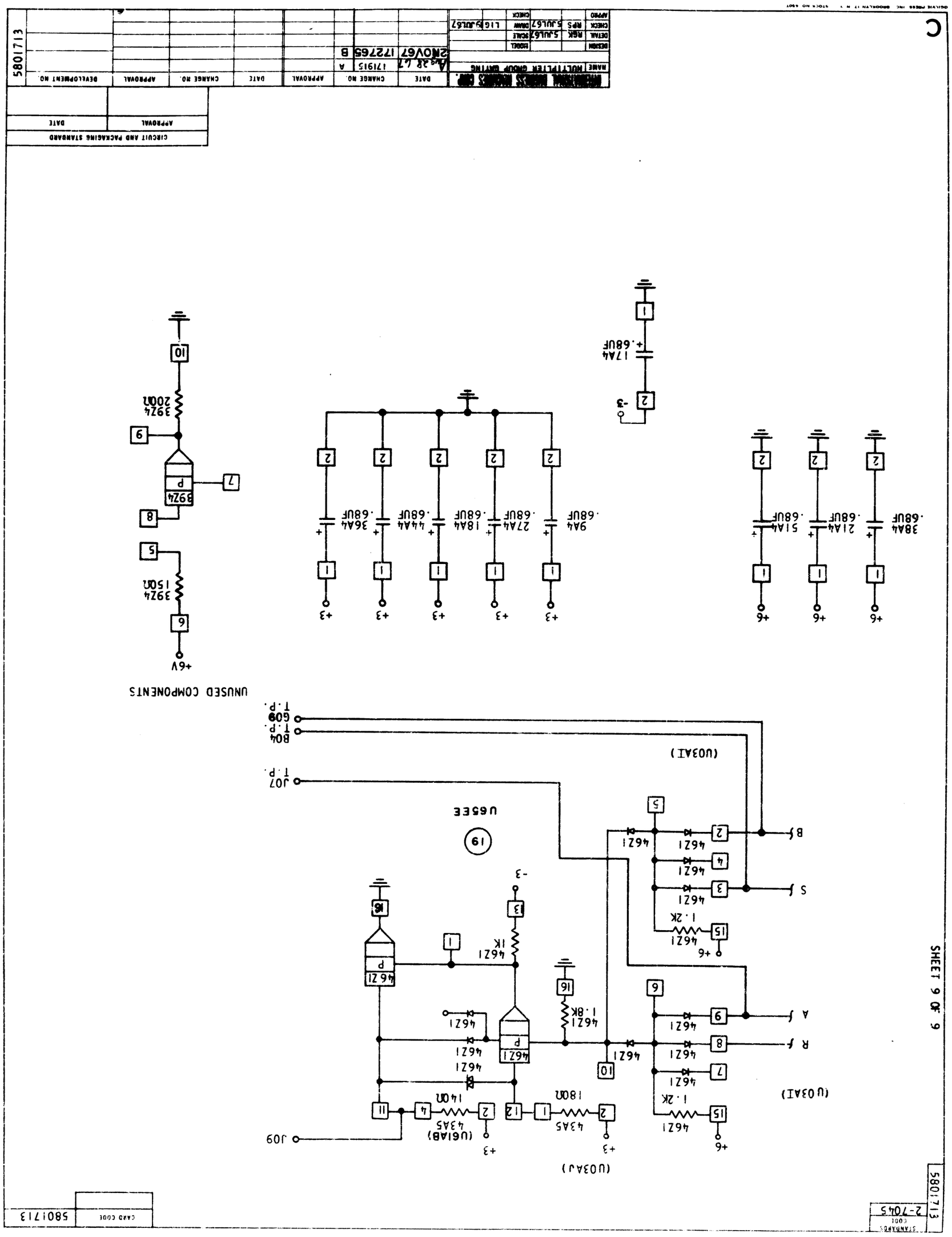
SHEET 9 OF 9
(U03AJ)
(U03AI)
(U03AI)
(U61AB)
J09
J07
B04
G09
UNUSED COMPONENTS
U65EE
19
CIRCUIT AND PACKAGING STANDARD
5801713