FORM 2-7045-6 (8-63)
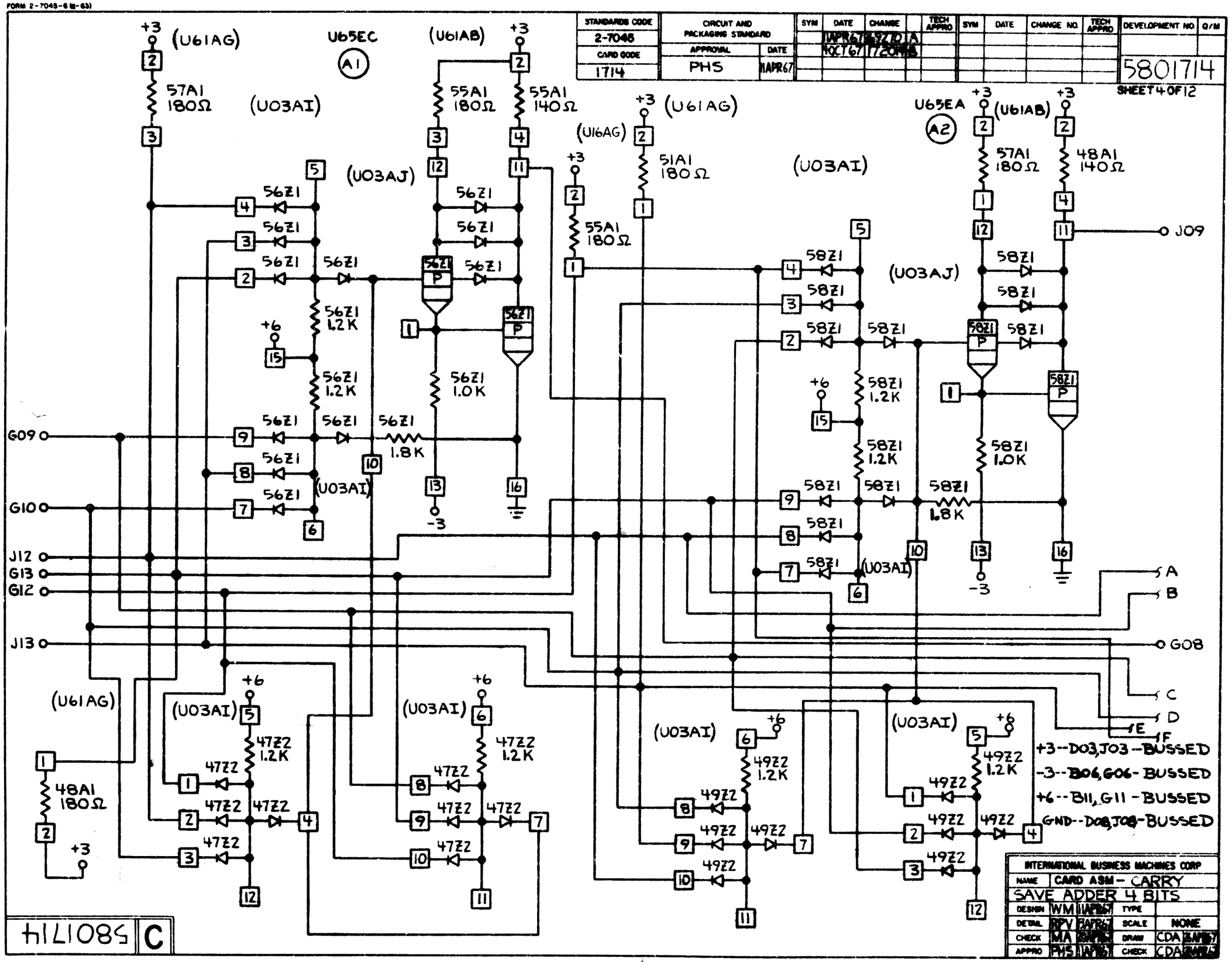
STANDARDS CODE	CIRCUIT AND PACKAGING STANDARD		SYM	DATE	CHANGE		TECH APPRO	SYM	DATE	CHANGE NO.	TECH APPRO	DEVELOPMENT NO.	Q/M
2-7045	APPROVAL	DATE		11APR67	47201A								
CARD CODE				10CT67	17204B							5801714	
1714	PHS	11APR67										SHEET 4 OF 12