FORM 2-7045-6 (8-63)

STANDARDS CODE	CIRCUIT AND PACKAGING STANDARD		SYM	DATE	CHANGE	TECH APPRO	SYM	DATE	CHANGE NO.	TECH APPRO	DEVELOPMENT NO	Q/M
2-7045				11APR67	69270A							
CARD CODE	APPROVAL	DATE		4OCT67	72C67B						5801714	
1714	P.H.S.	11APR67										
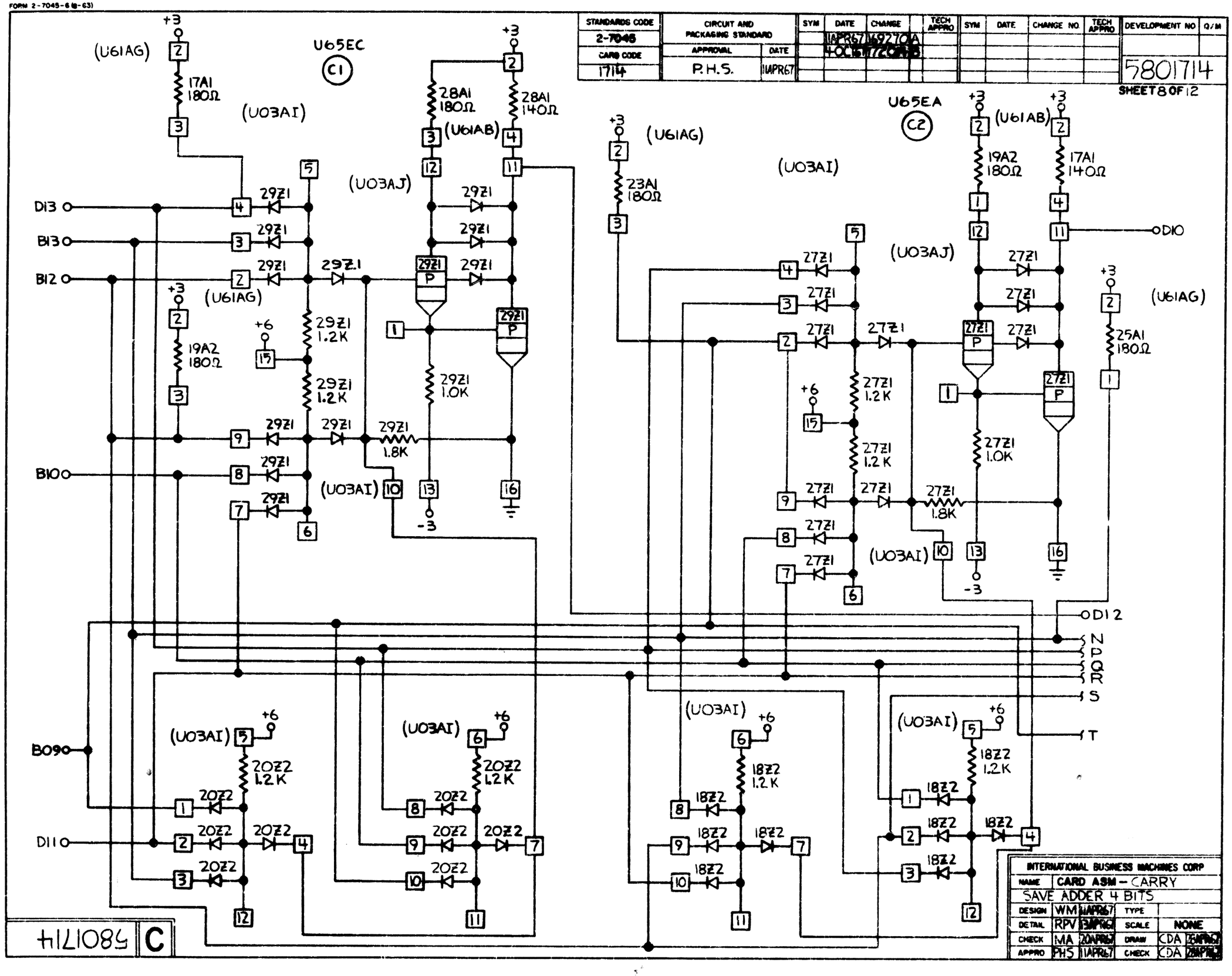
SHEET 8 OF 12