FORM 2-7048-6 (9-63)

STANDARDS CODE	CIRCUIT AND PACKAGING STANDARD		SYM	DATE	CHANGE		TECH APPRO	SYM	DATE	CHANGE NO.	TECH APPRO	DEVELOPMENT NO	Q/M
2-7045				11APR67	569270	A							
CARD CODE	APPROVAL	DATE		4OCT67	572014	B							
1714	PHS	11APR67										5801714	

SHEET 11 OF 12

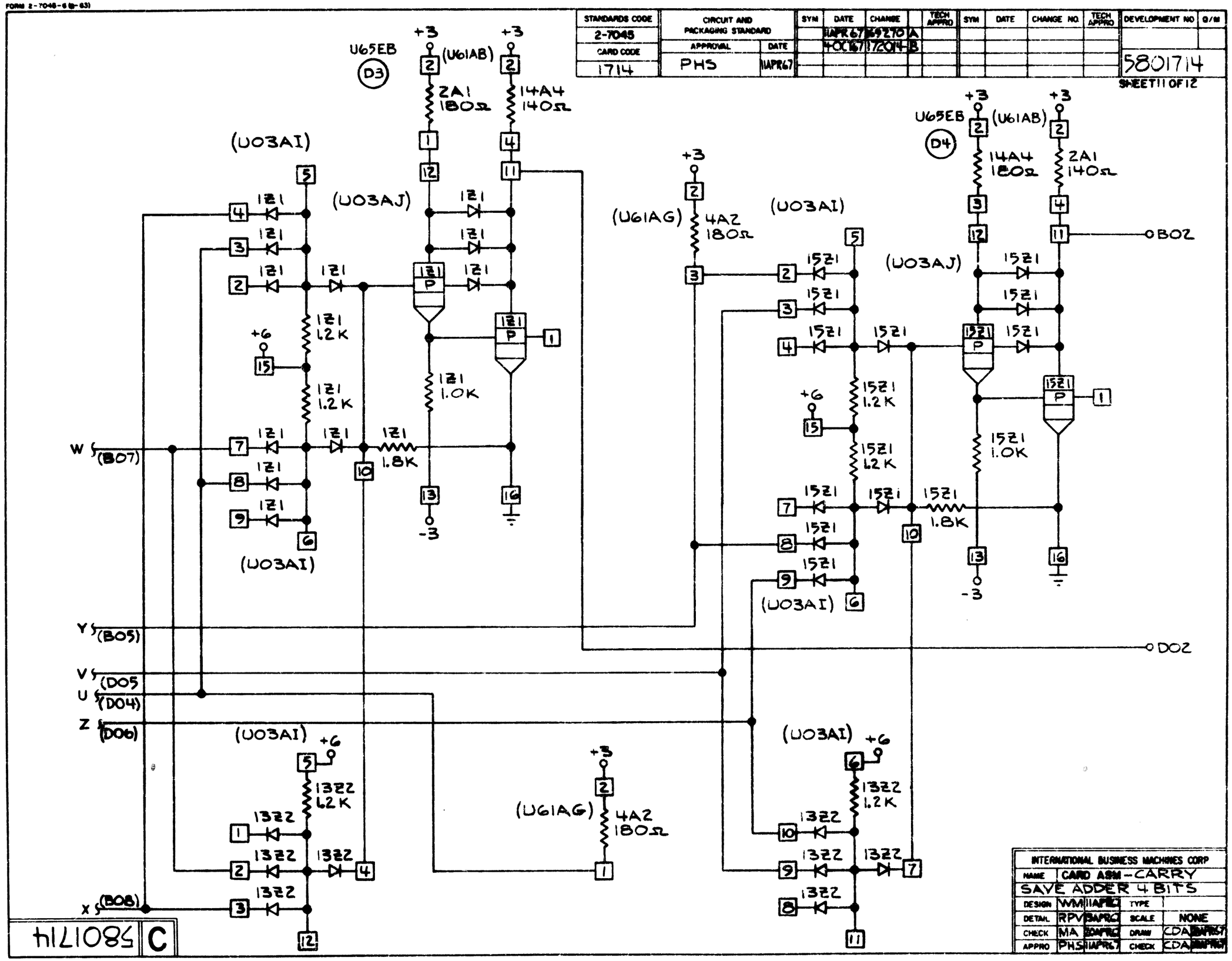

INTERNATIONAL BUSINESS MACHINES CORP				
NAME	CARD ASM-CARRY SAVE ADDER 4 BITS			
DESIGN	WM	11APR67	TYPE	
DETAIL	RPV	20APR67	SCALE	NONE
CHECK	MA	20APR67	DRAW	CDA 20APR67
APPRO	PHS	11APR67	CHECK	CDA 20APR67

5801714 C