FORM 2-7045-6 (9-63)

STANDARDS CODE	CIRCUIT AND PACKAGING STANDARD		SYM	DATE	CHANGE NO.	TECH APPRO	SYM	DATE	CHANGE NO.	TECH APPRO	DEVELOPMENT NO.	Q/M
2-7045	APPROVAL	DATE		4-14-67	169746-A						S 116375	
CARD CODE				30JUN68	175355	B						
1716	PHS	27JUN66									5801716	

SHEET 8 OF

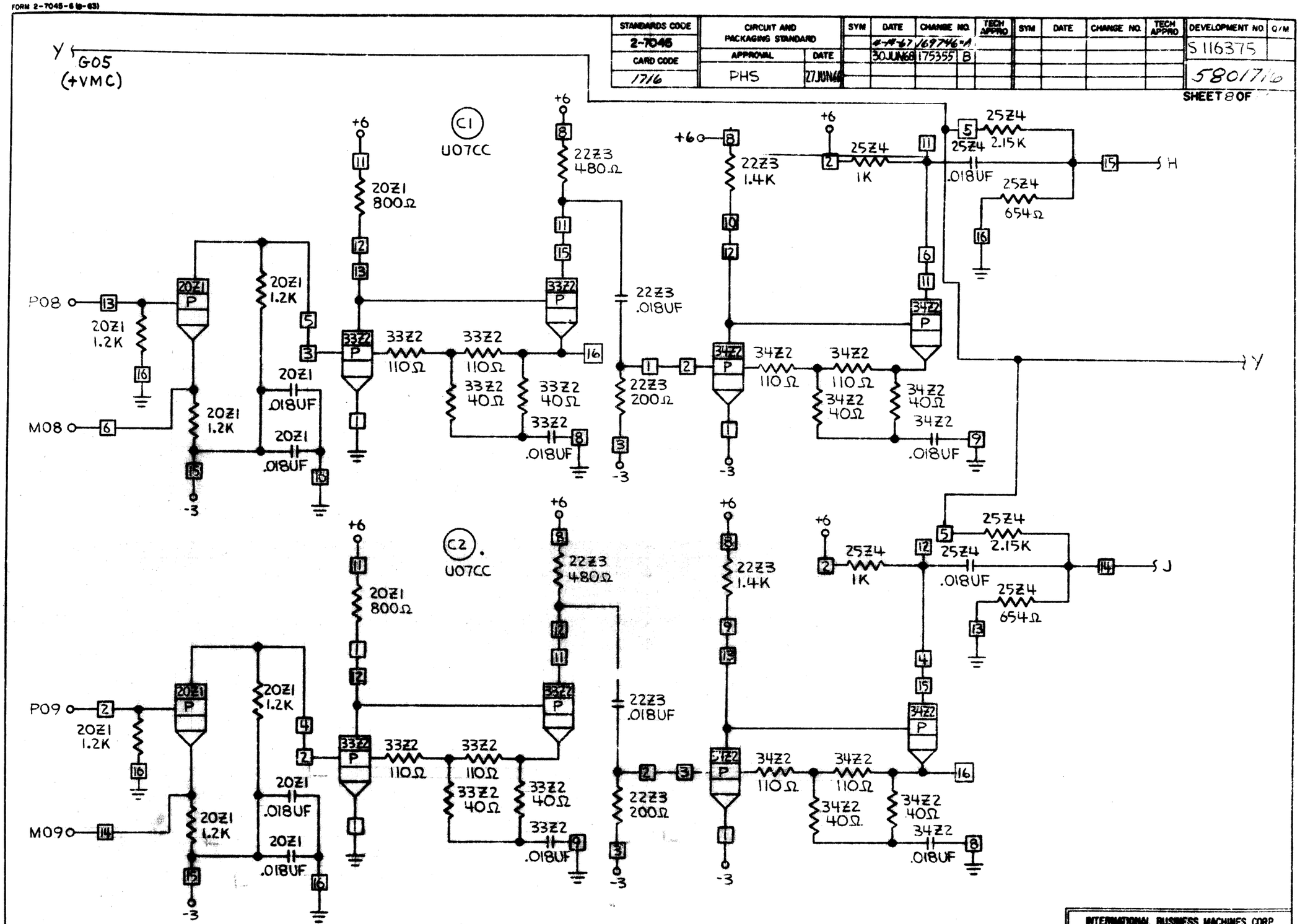

INTERNATIONAL BUSINESS MACHINES CORP				
NAME	CARD ASM – C50			
SENSE AMP AND LATCH				
DESIGN	DLM 5APR66	TYPE	C50	
DETAIL	TWN 27JUN66	SCALE	NONE	
CHECK	TWN 27JUN66	DRAW	CDA 26JUL66	
APPRO	PHS 27JUN66	CHECK		

9/L1085 C