FORM 2-7045-6 (8-63)

STANDARDS CODE	CIRCUIT AND PACKAGING STANDARD		SYM	DATE	CHANGE NO.	TECH APPRO	SYM	DATE	CHANGE NO.	TECH APPRO	DEVELOPMENT NO	Q/M
2-7045				4-14-67	167746-A						S116375	
CARD CODE	APPROVAL	DATE		30JUN68	175355	B						
1716	PHS	27JUN66									5801716	

SHEET 13 OF

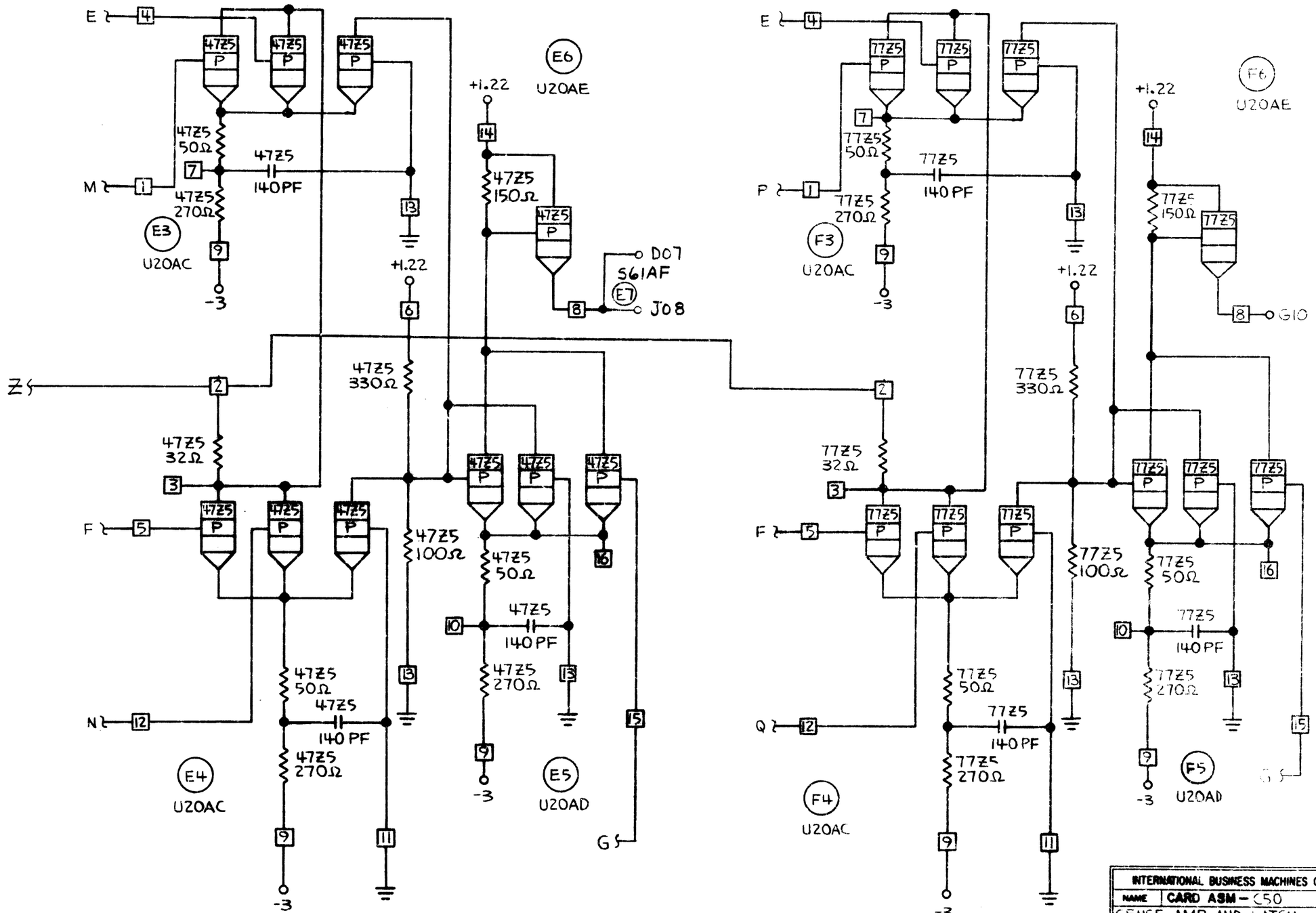

INTERNATIONAL BUSINESS MACHINES CORP				
NAME	CARD ASM – C50			
SENSE AMP AND LATCH				
DESIGN	DLM	5APR66	TYPE	C50
DETAIL	TWN	27JUN66	SCALE	NONE
CHECK	TWN	27JUN66	DRAW	CDA 27JUN66
APPRO	PHS	27JUN66	CHECK	

5801716 C