FORM 2-7046-6 (9-63)

STANDARDS CODE	CIRCUIT AND PACKAGING STANDARD		SYM	DATE	CHANGE NO.	TECH APPRO	SYM	DATE	CHANGE NO.	TECH APPRO	DEVELOPMENT NO	Q/M
2-7046				5 FEB 68	171652	A						
CARD CODE	APPROVAL	DATE										
1719	PHS	10 JAN 68									5801719	

SHEET 9 OF 17

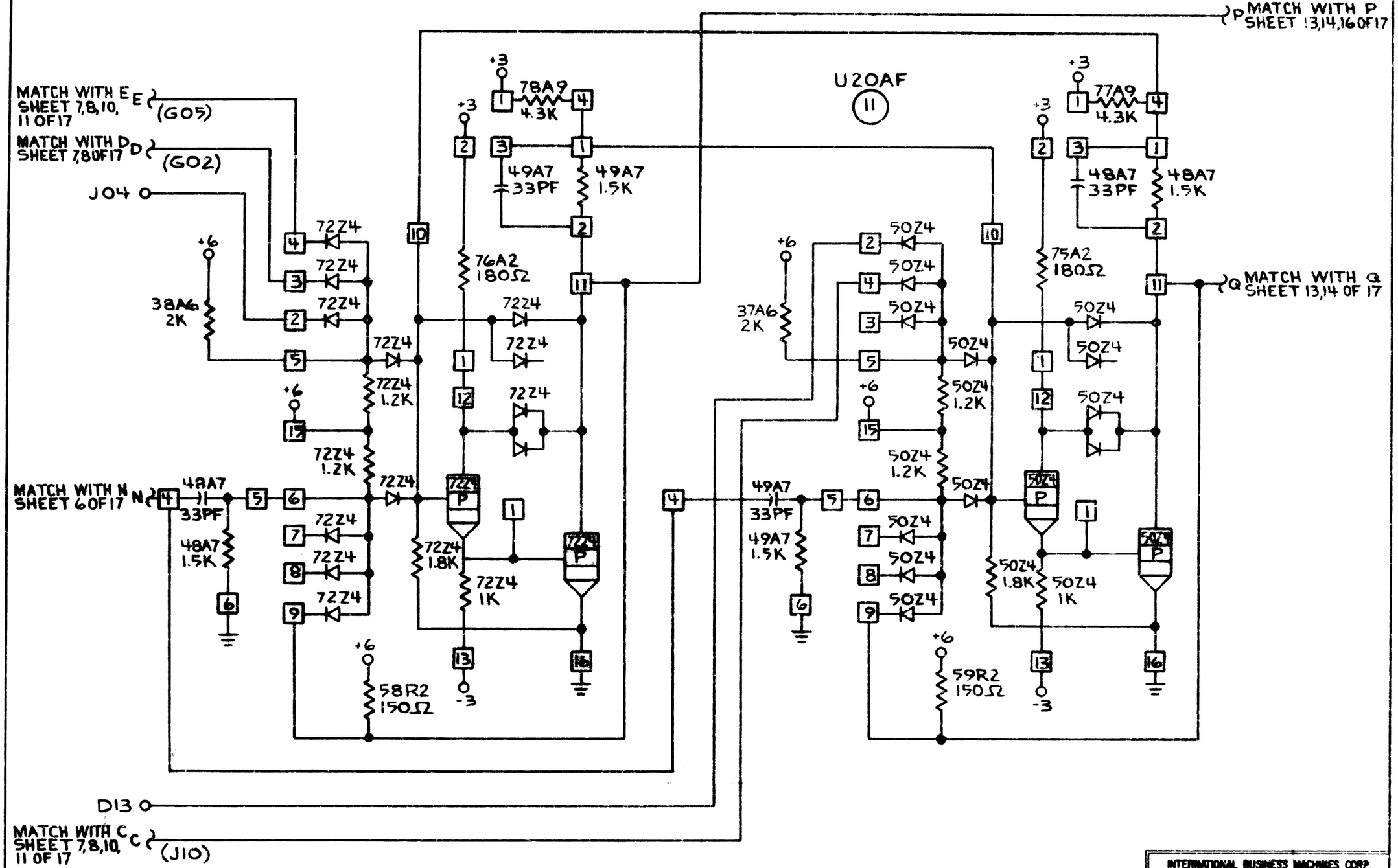

INTERNATIONAL BUSINESS MACHINES CORP			
NAME	CARD ASM - BASIC COUNTING ELEMENT		
DESIGN	RFZ 10 JAN 68	TYPE	APM-1
DETAIL	RFZ 10 JAN 68	SCALE	NONE
CHECK	RFZ 13 FEB 68	DRAW	CDA 17 FEB 68
APPRO	PHS 10 JAN 68	CHECK	CDA 17 FEB 68

6121085 C